

USER MANUAL
XR2 UTV SERIES

SABRE

SABRE ELECTRIC VEHICLES

CE CERTIFICATION
Through Quality Supervision & Inspection
Compliant with EU 167-2013 Standard

Before operating this vehicle, please read and understand the contents of this manual carefully.

PREFACE

Dear User,

Congratulations on owning an LT-30DUD electric all terrain off-road vehicle, and thank you for your trust in the Sabre brand. This manual introduces the safety of the LT-30DUD electric all terrain off-road vehicle Information on driving, equipment operation, and vehicle maintenance will help you use the vehicle correctly and truly experience the LT-30DUD electric all terrain off-road vehicle bringing you driving pleasure.

This product is designed and manufactured in accordance with the EU 167-2013 “Technical Requirements for Agricultural Machinery T-Class”, drawing on advanced technology from European and American countries. It has excellent performance, novel design, and key components made from imported or professional manufacturers. The paint used is luxury car specific baking paint, and the frame is welded with high-strength materials This series of products has the advantages of light weight, strong climbing ability, no pollution, low noise, fast charging, good braking performance, and flexible steering. It is a high-quality electric all terrain vehicle that integrates advanced, beautiful, and environmentally friendly features.

The table of contents and vehicle illustrations in this manual can help you quickly understand your vehicle. The following ten chapters provide detailed instructions on the use of various vehicle facilities. Before using the vehicle, please carefully read the accompanying materials. The information provided in these materials is very important for ensuring the safety of driving and property. Please strictly follow and keep them properly. When reading this manual,you will find markings such as “Caution” and “Warning” along with their explanations. These instructions help to ensure the safety of individuals, vehicles, and property. Please strictly follow them. The graphics and text in this manual are only used to convey information about the main functions and facilities of the vehicle, and cannot be used as a basis for product acceptance. Please refer to the actual vehicle for any discrepancies.

COPYRIGHT NOTICE

The content and technical specifications in this manual are valid at the time of publication. However, Aries EV Corporation reserves the right to change technical specifications and designs at any time without prior notice.

Aries EV Corporation October 2026 copyright. Without the written consent of Aries EV Corporation, no content of this manual may be reproduced or copied.

NOTE

The cover and images of this manual are for reference only, and the actual vehicle shall prevail.

Sincerely,

SABRE



CONTENTS

SECTION	PG #
Important Signs	4
Operational Safety	5
Introduction	6
VIN + Key Info	7
Driver Safety	9
User Responsibilities	16
Safe Riding Equipment	19
Warning Labels	20
Vehicle Structure	30
Main Components	31
Pre-Operation Check	45
Safe Operation	47
Operating Vehicle	51
Maintenance	64
Cleaning & Storage	83
After-Sales Service	85
Records	86
Appendix	87

IMPORTANT SIGNS

⚠ DANGER

Driving this vehicle poses significant risks, and before driving, the driver must meet the following basic requirements:

1. The driver must be at least 18 years old.
2. Green Pass requires drivers to hold a driving license with a D or E license.
3. Drivers must undergo professional driving training and master the driving skills of this vehicle model proficiently.
4. Understand the relevant local regulations and be aware of the permitted driving area for this vehicle model.

In order to prevent injury, if passengers do not meet the above basic requirements, they are prohibited from riding in this vehicle. Please read this manual carefully, as it contains more information on how to protect both the driver and the passengers during vehicle operation.

⚠ DANGER

Some of the features described in the manual may not be applicable to the current models sold in the market. All descriptions and directions provided in this manual are based on the operator's visual perception while sitting in the car. The manual contains the vast majority of configurations, some of which may not be applicable to the vehicle you have purchased. Please read the manual selectively based on the vehicle's configuration.

Signal Word

Signal words draw attention to safety signals or other signals, performance failure signals or other signals, and specify the severity or level of danger. The standard signal words in this manual are: Warning, Attention, Caution or Notify.

Notice

The following signal words and signs appear in this manual and on your vehicle. When these words and symbols appear, it means that your safety has been involved. Please memorize the meanings of these markings before reading this manual:

⚠ WARNING

This safety alert and sign indicate the presence of potential hazards that may result in injury or death.

⚠ WARNING

This safety alert and sign indicate the presence of potential hazards that may result in minor or moderate personal injury and/or vehicle malfunction.

Warning

This safety alert is unmarked, indicating that the current situation may cause vehicle malfunction.

Attention or Notice

Attention or notification will alert you of important information or instructions.

OPERATIONAL SAFETY

Our company's electric vehicles are designed to be simple and easy to operate, but please note the following operational safety guidelines.





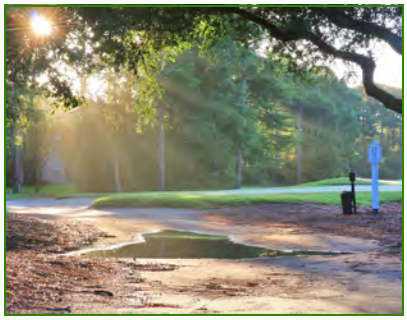



NEVER

Perform the Following Actions

- Do not operate the vehicle without proper training or guidance
- Do not operate the vehicle on highways or public roads, as collisions with other vehicles may occur
- Operating the vehicle on paved surfaces may significantly affect handling
- Do not drive at speeds beyond your skill level or the conditions of the terrain
- Do not operate the vehicle after consuming alcohol or taking medication that may impair your ability to drive safely

ALWAYS

Perform the Following Actions

- Avoid sudden changes in road or terrain conditions that may adversely affect handling
- Use proper driving techniques to prevent the vehicle from tipping over on slopes, rough terrain, or while turning
- Wear appropriate eye protection, a helmet, and protective clothing when operating or servicing the vehicle

Notice

Read the user manual. Follow all instructions and warnings

⚠ WARNING

Read, understand, and follow all instructions and safety warnings on this manual and all product warning labels. Failure to follow safety warnings may result in serious injury or fatal accidents.

If there is a malfunction in the vehicle's battery or electronic control system, it is necessary to promptly contact the dealer for maintenance.

Unauthorized personnel are not allowed to drive this vehicle.

INTRODUCTION

Welcome to the Aries EV Family

Thank you for purchasing a vehicle from Aries EV, and welcome to the Aries EV family. Aries EV brings together American industry experience and established electric vehicle manufacturing expertise to deliver thoughtfully designed electric vehicles for everyday use, work, and adventure. With a focus on quality, capability, and customer support, Aries EV offers a growing lineup of electric vehicles designed to meet a variety of needs. From golf and community transportation to off-road utility vehicles, our products combine electric power, considered design, and practical features to create a distinctive driving experience. The Sabre XR2 represents our commitment to off-road capability, with a powerful electric drivetrain, high-capacity lithium battery, all-wheel CV-axle drive, and suspension designed for demanding terrain.

Aries EV brings together experienced American industry professionals and established manufacturing capabilities to support the development, delivery, and continued improvement of its vehicles. Drawing on experience across the electric vehicle industry, our team works to provide dependable products, practical solutions, and an ownership experience supported by knowledgeable professionals. As our lineup and dealer network continue to grow, we remain focused on delivering electric vehicles that combine performance, thoughtful design, and long-term value.

Aries EV is committed to a philosophy centered on quality, service, and innovation. We believe that a well-designed vehicle should be supported by dependable service and clear information throughout ownership. Our approach brings together product development, manufacturing experience, and dealer support, with an emphasis on meeting customer needs and continually improving the ownership experience. Through this commitment, Aries EV aims to make electric mobility practical, capable, and accessible for more drivers.

The Aries EV lineup includes electric golf carts and off-road utility vehicles designed for different environments and applications. The Classic Series offers practical electric transportation, the Signature Series delivers a more refined driving experience, and the Sabre UTV lineup is built for off-road utility and adventure. These vehicles are intended for a range of uses, from golf courses and residential communities to private properties, outdoor recreation, and work environments. Vehicle equipment, intended use, and operating requirements vary by model. Always confirm the capabilities and permitted use of your specific vehicle before operation.

After-sales service is an important part of the Aries EV ownership experience. We are committed to supporting our customers through owner resources, vehicle documentation, and a network of authorized dealers. Your authorized Aries EV dealer can assist with vehicle questions, service needs, parts, and maintenance recommendations. For the best ownership experience, contact an authorized Aries EV dealer for service and repairs requiring specialized knowledge, tools, or training. Our goal is to provide helpful, professional support throughout your vehicle's service life.

Aries EV is focused on the future of electric mobility, bringing together manufacturing experience, thoughtful vehicle design, and customer support to create products for the road, the course, and the trail. To help ensure safe and enjoyable operation of your vehicle, read and follow the instructions and recommendations in this user manual. This manual provides important information about vehicle operation, safety, inspection, and routine maintenance. Repairs beyond the procedures specifically described for the owner should be performed by qualified technicians familiar with the vehicle. Your authorized Aries EV dealer is a resource for model-specific guidance, service, and maintenance support.

The information in this manual reflects product information available at the time of publication. Equipment, specifications, and features may vary by model, configuration, and market. The instructions in this manual are provided for informational purposes and do not override applicable laws or safety requirements. Aries EV reserves the right to revise or update technical specifications, service and maintenance information, prices, colors, materials, designs, configurations, and other product details without prior notice. As product design and manufacturing processes continue to evolve, the actual vehicle may differ in some respects from illustrations or information in this manual. Aries EV is not responsible for omissions, deviations, inaccuracies, printing defects, or errors in the presentation of information, illustrations, or instructions. Reproduction or reuse of any part of this manual, including images, text, and other materials, requires prior written permission from the applicable copyright owner.

The information in this user manual is provided for the Aries EV Sabre XR2 UTV. For the latest product information, service guidance, warranty details, and owner resources, contact an authorized Aries EV dealer or visit the official Aries EV website.

This user manual applies to the following vehicle model: Sabre XR2.

VIN + KEY INFO

VEHICLE IDENTIFICATION CODE &
Vehicle Key Information

Please record your chassis number in the blank space below. Please take out the spare key and store it in a safe place. Your key can only be copied by matching a blank key if there is only one existing key. If both keys are lost, the entire lock assembly needs to be replaced.

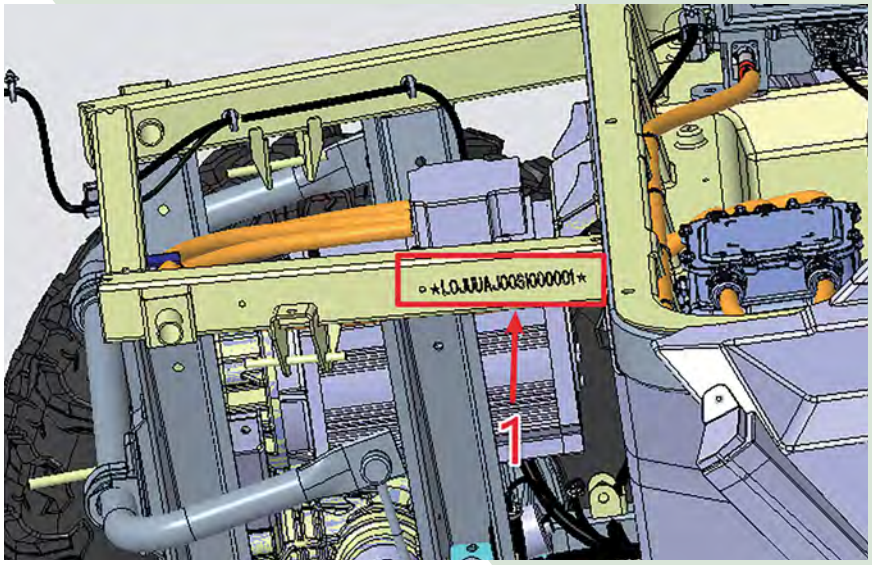

1 Vehicle Identification Number (VIN)

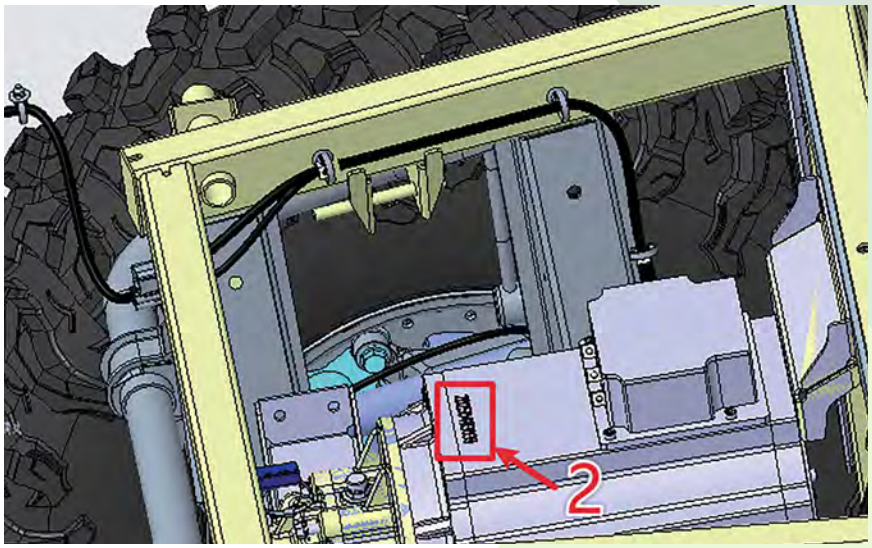

2 Motor Code

VIN + KEY INFO

VEHICLE PARAMETERS	
Model	LT-30DUD
Vehicle Length	10' 7"
Vehicle Width	5' 8"
Vehicle Height	7' 5"
Wheelbase	83.07"
Front Track / Rear Track	Front 56.89" / Rear 53.35"
Full Load Maximum Speed	53 mph
Range	75 mi (Flat Road Constant Speed Four-Wheel Drive)
Maximum Climbing Gradient Under Full Load	45%
Slope Performance	15%
Minimum Ground Clearance	12.6"
Minimum Turning Radius	14.8
Braking Distance	< 82 (at a Speed of 37 mph)
Energy Consumption Per 100 KM	15.5kwh
Front Wheel Toe In	0.20" – 0.24"
Wheel Camber Angle	0.1°
Kingpin Inclination Angle	5°
Caster Angle	6°
Allow Max. Cargo Mass for Towing	661lbs. (Flat Road Surface)
Box Dimensions	38.2" × 58.3" × 14.2"
Container Load Capacity	772lbs.

ELECTRICAL SYSTEMS PARAMETERS	
Model	LT-30DUD
Motor Model	YS210H15144H61
Motor Type	AC Asynchronous Motor
Rated Power of Electric Drive	15kw
Peak Power of Electric Drive	28kw
Motor Limit Torque	35.8N.m
Peak Torque of Motor	150N.m
Rated Speed	4000rpm
Maximum Speed	7500rpm
Rated Voltage	96VAC
Rated Current	120A
Maximum Current	470A
Power Battery	Lithium Iron Phosphate Battery
Battery Type	144V
Rated Voltage	130AH
Nominal Capacity	18720Wh
Electric Energy	Yingbol MC3336
Electric Control	Charging Machine 144VDC
OBC+DCDC Assembly	6.6 KW DCDC 14V 1.5 KW

VEHICLE CONFIGURATION PARAMETERS	
Model	LT-30DUD
Steering System	Adjustable steering wheel, bidirectional gear rack steering system + automatic clearance compensation function + electric power steering
Braking System	Four wheel disc hydraulic brake + EPB electronic parking system
Front Suspension System	Double arm independent front suspension + spiral spring + cylinder hydraulic shock absorber, ball cage drive shaft
Rear Suspension System	Double arm independent rear suspension + spiral spring + cylinder hydraulic shock absorber, ball cage drive shaft, speed ratio 11.27:1
Tire Specification	Off road tires (front wheel 29 * 9 R14, rear wheel 29 * 11 R14)
Transmission System	Motor directly connected to front and rear drive boxes + front and rear differential locks
Body	Motor directly connected to front and rear drive boxes + front and rear differential locks
Seat	Ergonomic seats, sponge seats; Optional high-quality leather seats
Front Gear & Windshield Wipers	Automotive tempered glass + wiper (optional)
Car Door	Half door
Floor	Injection molded anti-skid flooring
Canopy	Automotive engineering PP material injection molding
Rear-View Mirror	One manually adjustable and adjustable external rear-view mirror on each side
Dashboard	Electric vehicle combination instrument panel, 12.3" multimedia infotainment system, USB + Type-C interface, various function switches (gear, differential lock, winch, dual flash, electronic parking, multifunction steering wheel)
Lighting & Signal	Car LED lighting system, low/high beam, turn signal, daytime running lights, integrated rear taillights, horn, reflective stickers
Rated Passengers (PCS)	3 People (including driver)
Other Configurations	Front bumper, front winch, rear trailer

DRIVER SAFETY

Overall Safety Warning

⚠ WARNING

Failure to pay attention to the warnings in this manual may result in serious injury or death. This car model is not a toy and is dangerous to operate. The operation method of this vehicle is different from other types of vehicles such as cars. If you do not take appropriate preventive measures, you may even collide or roll instantly during routine operations such as turning or crossing obstacles. Please read this manual carefully before operating and using this vehicle, understand all safety warnings, preventive measures, and operating procedures.

Age Restriction

This model is only for adult use. Anyone under the age of 18 is prohibited from operating this vehicle, and children under the age of 16 are prohibited from riding in Aries EV designed passenger vehicles.

Familiar with vehicles. As the operator of this vehicle, you are responsible for your personal safety, the safety of others, and environmental protection. Please read and understand this user manual carefully. This user manual contains valuable information about all aspects of the vehicle, as well as safe driving procedures.

Equipment Modification

Aries EV cares about the safety of our users and the public, therefore, we strongly recommend that users do not install any equipment on their vehicles that would increase their speed or power, or make any other modifications to their vehicles for these purposes. Any modification to the original vehicle can cause serious safety hazards and increase the risk of human injury. If any unauthorized accessory devices are installed on the vehicle, or any modifications that increase speed and power are installed on the vehicle, our warranty policy for the vehicle will immediately terminate. Be careful:

Add specific accessories that may change the vehicle's handling and performance characteristics, including but not limited to lawn mowers, plows, oversized tires, spray, large luggage racks, cranes and trailers. Use only authorized attachments and familiarize yourself with their functions and roles on the vehicle.

- Avoid burns caused by contact with heating components
- The three electric system may become hot during operation, and should not be touched during or shortly after the vehicle is running to avoid injury.

Damage to the Vehicle Specific Voltage System

The dedicated voltage range for vehicles is 112.5 to 166.5V, so caution and equipment support are required during rescue operations.

⚠ DANGER

If the vehicle specific voltage cable components are damaged and the wiring and terminals are exposed, do not touch the exposed components under any circumstances. In addition, if it is uncertain whether the damaged component is a vehicle specific voltage component, do not touch the exposed wiring or terminals.

Contact with wiring or terminals without proper safety protection may result in severe burns or electric shock, causing serious injury or death.

If it is necessary to come into contact with exposed

DRIVER SAFETY

parts of vehicle specific voltage cables or voltage components, or if there is a risk of contact, insulated protective equipment (insulated rubber gloves, rubber insulated shoes, goggles) that can withstand electric vehicle specific voltage must be used

When personnel are separated from the vehicle, such as storing it after an accident, please affix a danger sign on the vehicle body that reads “Working. Do not touch!” to prevent other personnel from accidentally touching the vehicle and causing serious safety accidents.

Preliminary Preparation

When repairing or handling vehicle-specific high-voltage systems, please prepare at least the following safety protection measures:

- Insulated protective equipment, including insulated gloves, protective goggles, insulated shoes, etc.
- ABC dry powder fire extinguisher.
- Solvent-resistant protective equipment, including gas masks for organic gases, chemical-resistant rubber gloves, etc.
- Wiping cloth and towel.

The following behaviors may cause the battery to heat up, smoke, catch fire, or explode:

- Do not place batteries near sources of fire or heaters.
- Do not place the battery in high- temperature locations, such as in direct sunlight for a long time (≥ 140°F).
- Do not hit or throw batteries.
- Do not allow external force to cause battery cracking or deformation.

The Battery is Smoking or Heating Up

If abnormal heating is found in the power battery, the vehicle should be powered off and the key should be removed. At the same time, the driver and passengers should be evacuated, and Aries EV authorized dealers should be contacted for consultation in a timely manner.

If smoke is detected from the power battery, immediately move away from the vehicle, contact the fire department, prepare for fire prevention, and contact Aries EV authorized dealers to recycle and dispose of waste batteries. Waste batteries are classified as “hazardous waste” and should not be disposed of on your own.

Vehicle / Battery on Fire

ABC dry powder fire extinguishers or electrical fire extinguishers can quickly eliminate fires caused by electricity. If the fire cannot be controlled, please evacuate in a timely manner, contact the fire department, and remove all flammable materials nearby.

When the insulation coating of cables and wires is short circuited due to combustion or when a large amount of water is used to extinguish the fire, the dedicated voltage of the vehicle will be cut off.

Depending on the location of the fire, the dedicated voltage of the vehicle may not be cut off, so it is necessary to cut off the vehicle’s power supply after the fire.

If the whole vehicle catches fire and the fire has not spread to the vehicle high-voltage battery, it can be disposed according to the foam, carbon dioxide and other extinguishing agents used in the vehicle’s regular fire. If the power battery catches fire, a large amount of water needs to be used for cooling and extinguishing.

DRIVER SAFETY

Vehicle Submerged in Water

Risk of electric shock. When the vehicle encounters power battery failure, insulation alarm and other faults after wading through water, please power off the vehicle and remove the key, and contact Aries EV authorized dealers.

Battery Damaged

If the battery is damaged due to collision or other circumstances, please follow the following handling plan: If there is suspicion of battery leakage, refer to the content of “battery smoking or heating” for handling; If the battery casing is cracked or damaged, please contact Aries EV authorized dealers for recycling or repair;

How to Completely Cut Off the Power Supply

Wear insulated protective equipment, turn off the main switch, and disconnect the negative terminal of the lithium battery.

If the main switch is operated while the instrument display screen is turned off, the vehicle may be started.

Even if the main switch is turned off, it takes about ten minutes for the stored charges in capacitors and other devices to be fully released. Wait for a period of time before starting work to avoid accidents such as short circuits.

After disconnecting the battery, wait for a few seconds for the battery to discharge before starting to work.

If the vehicle specific voltage cable is not damaged, but the wiring or terminals are exposed. Do not touch exposed parts under any circumstances. In addition, if it is uncertain whether the damaged component is a vehicle specific voltage component, do not touch exposed wiring or terminals. Careless contact with wiring or terminals may result in severe burns or electric shock, causing serious injury or death.

Power Battery

The capacity of the battery gradually decreases with the increase of usage time and driving mileage, and proper use and maintenance can effectively extend the battery life.

Battery Storage / Usage Environment

- Do not store or use in environments that are prone to flooding.
- Do not store or use in high-temperature environments (≥ 140°F).
- Do not store or use in environments with high humidity or significant humidity fluctuations.
- Do not store or use in environments with high levels of dust or gravel.
- Do not store or use near sources of fire.
- Do not store or use near flammable or explosive materials.

DRIVER SAFETY

- Do not store in sealed containers.
- Do not store or use in environments accessible to young children or pets.

Charging Temperature	Discharge Temperature
32–131°F	23–131°F

The battery should be stored in a dry, clean, and well ventilated warehouse at a temperature of 41–104°F, with a SOC maintained at 50%. A full charge and full discharge should be performed once every 6 months using an compatible charger.

If the battery casing is found to be broken, smoking or heating during storage or use, refer to the content of "Battery Smoking or Heating" for handling, and promptly contact Aries EV authorized dealers for recycling or repair.

Replacing the battery requires the use of Aries EV original power batteries. If non original power batteries are used, it may result in failure to start, circuit faults, damage to electrical components, etc. Any faults caused by non original power batteries are the responsibility of the user.

Maintenance of Batteries

Before first use, the power battery should be charged to at least 80% of its capacity before use.

Please charge the battery as soon as possible after the instrument shows 20% remaining power, and try not to consume the battery to the lowest level, as this will affect the battery's lifespan. After the battery pack is fully discharged, it must be charged for at least 1 hour within 24 hours to avoid further self consumption and damage to the battery pack.

It is prohibited to install any electrical equipment on vehicles. Poor quality electrical equipment may cause short circuits, fires, electrical accidents, etc. The installation of electrical equipment will affect the vehicle's range and reduce battery life.

Long term climbing or high-speed driving can cause the battery temperature to become too high.

It is recommended to go to Aries EV authorized official dealers for inspection and maintenance every three months to confirm whether the relevant joints are loose and whether the battery needs maintenance or upkeep.

Original chargers or designated charging stations must be used for charging. Non original chargers or designated charging stations may result in inability to charge or cause circuit/battery failure.

If the vehicle is parked for a long time, check the power battery level every two weeks to avoid low power.

DRIVER SAFETY

Charge

⚠ WARNING

- It is recommended not to charge or park in residential buildings. When charging, one should stay away from flammable and explosive materials, beware of flames and sparks, and the charging time should not be too long.
- It is recommended not to charge in enclosed spaces or high temperature environments, and not to charge in rainy and humid environments.
- It is strictly prohibited to plug or unplug the plug with wet hands.
- It is recommended to have personnel supervise during charging to avoid accidents.
- If the temperature of the vehicle's power battery is too high or it has just discharged rapidly from intense driving, it is recommended to let it cool down before charging. High temperature charging can shorten the lifespan of the vehicle's power battery.

Charging Gun

- When the battery is fully charged, the battery management system will automatically cut off the charging current to prevent overcharging.
- Please use the original charging gun and a stable AC power source when charging. It is prohibited to use generators or other equipment to charge the vehicle.
- During the charging process, avoid placing the charging gun control box directly under heat sources or direct sunlight. If the indicator light is abnormal, there is an odor, or the shell is overheated, stop charging immediately, unplug the power, and go to an authorized Aries EV dealer to inspect or replace the charger.
- Do not use charging guns for other electrical equipment, otherwise it may cause abnormal situations such as battery overcharging and damage.
- High voltage danger, do not disassemble, repair or replace the components inside the charging gun by yourself.
- Using a charging gun with abnormal charging characteristics will result in insufficient or overcharging of the battery.
- The use and storage environment of the charging gun should be kept dry and ventilated, and liquid, granular or metal objects should be prevented from entering the interior of the charging gun to avoid causing internal short circuits.
- It is prohibited to make any modifications to the charging gun, including extension cords, power strips, distributors, grounding adapters, surge protectors, or any similar electrical equipment.
- If the charging cable is worn, the insulation device is damaged, the wire is exposed or shows any significant damage, it is prohibited to continue using it.
- If the shell or charging connector of the charging gun is broken, damaged, or shows any significant damage, it is prohibited to continue using it.

DRIVER SAFETY

- The charging gun must be properly grounded during use. If the charger malfunctions, proper grounding can reduce the risk of electric shock. If you are unsure whether the socket you are using has grounding function, please contact a qualified electrician for inspection and verification.

Information about the power pack

When the vehicle is turned off, its electronic devices will still consume power from the power pack at an extremely low speed.

High voltage warning

⚠ WARNING

Working on high-voltage components requires special training, qualifications, and tools. All unspecified and unexplained work can only be performed by trained Aries EV technicians. Do not turn on the motor, lithium battery, or car charger.

Fault Maintenance

If there is any malfunction in the vehicle's power supply or charging system, please go to an authorized Aries EV dealer for repair or replacement.

PRECAUTIONS FOR EXTREME ENVIRONMENTS

Low-Temperature Environment

Generally, low temperature environments do not have a permanent impact on vehicle power batteries, but they temporarily affect the release of energy from the power battery. The colder the environment, the more the driver can feel the changes in driving experience caused by this impact, such as a decrease in power. Correspondingly, the time for the vehicle to reach maximum speed will also be extended.

It is not recommended for users to drive vehicles in environments below 23°F. If driving is necessary, please charge the vehicle in an environment above 32°F after driving. It should be noted that the battery management system prohibits power batteries from discharging in environments below 14°F. When charging power batteries in low-temperature environments, priority will be given to restoring the battery to room temperature, and charging will only be carried out when the battery temperature reaches the appropriate level.

Storing vehicles at temperatures below –4°F may cause permanent degradation of power battery performance, so it is not recommended to store vehicles at excessively low temperatures. Exceeding this temperature and complying with long-term storage requirements will ensure that the power battery will not be permanently affected during winter storage, even if the storage temperature is far below freezing point.

DRIVER SAFETY

High-Temperature Environment

The high temperature environment will not cause any significant performance changes to the vehicle operation, but if the temperature of the power battery exceeds 131°F, the battery management system will prohibit the power battery from continuing to discharge.

At ambient temperatures above 113°F, the charging speed of the battery will decrease, and when the battery temperature exceeds 131°F, the battery will stop charging.

Storing the vehicle in an environment above 104°F for direct sunlight exposure may cause permanent degradation of the power battery performance

USER RESPONSIBILITIES

Qualified & Responsible

Please carefully read this user manual and the warning labels on the vehicle. If conditions permit, please study safe driving training courses in open areas and practice using low gears. High speed driving requires more experience, knowledge, and suitable driving conditions. Please be proficient in vehicle operation control technology and routine vehicle operations.

This model is a vehicle that can only be used by adults and is prohibited for minors under the age of 18 to operate. The operator of this vehicle must be tall enough to correctly sit in the seat, lean against the backrest, and fasten the seat belt. At the same time, both hands should be able to grip the steering wheel, the right foot should be able to reach and control the complete brake and accelerator pedal return, and the left foot should be firmly placed on the foot pedal.

According to local laws, drivers may be required to hold a valid driving license.

Carrying Passengers

- Only two passengers are allowed, and the passengers must be seated correctly in their seat.
- Passengers must be at least 16 years old and tall enough to sit correctly with their backs against the backrest and wear a seat belt. They must hold the armrests with both hands, keep their feet firmly positioned, with their right foot on the foot pedal and their left foot on the vehicle floor.
- Passengers who have taken medication, consumed alcohol, or are tired or sick must not be carried, as these conditions can slow reaction time and impair judgment.
- Instruct passengers to read the vehicle safety warning labels.
- If you judge that another person's ability or judgment is insufficient to concentrate and adapt to the terrain conditions, refuse to carry that passenger. This is especially important for SSV models, where passengers must always pay attention to the terrain ahead and be prepared for potential collisions.

Drive with Caution

- This vehicle is not a toy and is dangerous to operate. Its driving characteristics differ from those of motorcycles and cars. Sudden maneuvers, such as emergency turns, rapid acceleration or deceleration, driving on slopes, or crossing obstacles, can quickly cause collisions or rollovers if proper precautions are not taken.
- Do not exceed the speed limit. Always maintain a speed appropriate for the terrain, visibility, driving conditions, and your experience.
- Do not attempt jumps, skidding, spinning in place, or other stunts.
- Do not accelerate or decelerate suddenly while making sharp turns, as this may cause a rollover.
- Do not intentionally slide the vehicle. If the vehicle begins to slip, turn the steering wheel in the opposite direction of the slide. On extremely slippery surfaces, such as ice, drive slowly and cautiously to reduce the risk of slipping and losing control.

USER RESPONSIBILITIES

- Before reversing, ensure there are no people or objects behind the vehicle. Be aware of blind spots, and reverse slowly when it is safe to do so.
- Do not exceed the vehicle's maximum cargo capacity. Secure the cargo properly, reduce speed, allow for a longer braking distance, and follow all other instructions in this manual.
- Ensure that cargo is distributed properly in the cargo box. Improper distribution may shift the vehicle's center of gravity and cause a rollover.

Roll Over Protection System (ROPS)

- The vehicle's rollover protective structure (ROPS) meets the performance requirements of ISO 3471. ROPS can limit the intrusion of external objects and reduce the risk of injury in the event of a rollover.
- Always follow the safe driving and operating instructions in this user manual to prevent vehicle rollovers.
- Do not extend your hands or feet outside the vehicle while driving, as the ROPS cannot protect you from injury in a rollover accident.
- If the ROPS has been damaged in any way, have your LVTO NG authorized dealer conduct a comprehensive and systematic inspection of the vehicle's ROPS.

Passenger Restraint System

- This vehicle is designed to carry one driver and two passengers. Everyone must wear the appropriate protective equipment.
- Drivers and passengers must always secure the side doors or side door mesh and fasten their seat belts while driving.

Terrain Conditions

- Avoid emergency turns, sudden acceleration, and sudden braking when driving on public roads.
- When driving on unfamiliar terrain, reduce your speed and exercise extra caution. Always remain alert to changing terrain conditions and take time to learn how to operate the vehicle in different environments.
- Before learning and practicing essential vehicle control techniques, avoid driving on extremely rugged, smooth, or soft terrain. Exercise particular caution on these surfaces.
- Do not drive on steep slopes that are unsuitable for your vehicle or exceed your driving abilities. Practice on small slopes first.
- Always follow the correct procedures for climbing and descending slopes. Do not cross mountain peaks at high speeds.
- Do not attempt to drive on steep slopes or sloping terrain while towing a trailer.
- Before driving into a new area, check for obstacles and follow the correct operating procedures when driving over obstacles or fallen trees.
- Do not drive this vehicle in deep water or strong currents. Be aware that wet brakes may have reduced

USER RESPONSIBILITIES

braking performance. Check the brakes promptly after exiting the water. If necessary, drive slowly and apply the brakes several times to dry the braking system through friction.

- Before leaving the vehicle, ensure it is parked on the flattest available surface, the electronic shifter is in the parking position, the vehicle is turned off, the handbrake is applied, and the key is removed.
- Never assume the vehicle can safely navigate every surface. Holes, potholes, embankments, soft or hard roads, and other irregular surfaces can cause sudden changes in terrain that may make the vehicle unstable or cause it to overturn. Reduce your speed and watch the terrain ahead. If the vehicle begins to tip or roll, turn the steering wheel in the direction of the roll.
- Do not use your arms or legs to prevent a rollover. Keep all four limbs inside the ROPS roll cage at all times.

SAFE RIDING EQUIPMENT

Be sure to wear clothing suitable for cycling. To ensure comfort and reduce the risk of injury, it is required to wear specialized protective clothing while driving this vehicle.

1. A helmet is the most important component of safety riding protective equipment, and certified helmets can prevent serious head injury accidents.
2. Eye protection equipment. A pair of goggles or helmet face shields can provide the best protection for your eyes. They must be kept clean and have shatter resistant design, and do not rely on sunglasses as the correct eye protection equipment.
3. Off road gloves come with joint pads for optimal comfort and protection.
4. The best shoes are a pair of sturdy calf boots with heels.
5. Always wear long pants and long-sleeved shirts to protect your arms and legs. Cycling pants and sports shirts with knee pads and shoulder pads offer the best protection.

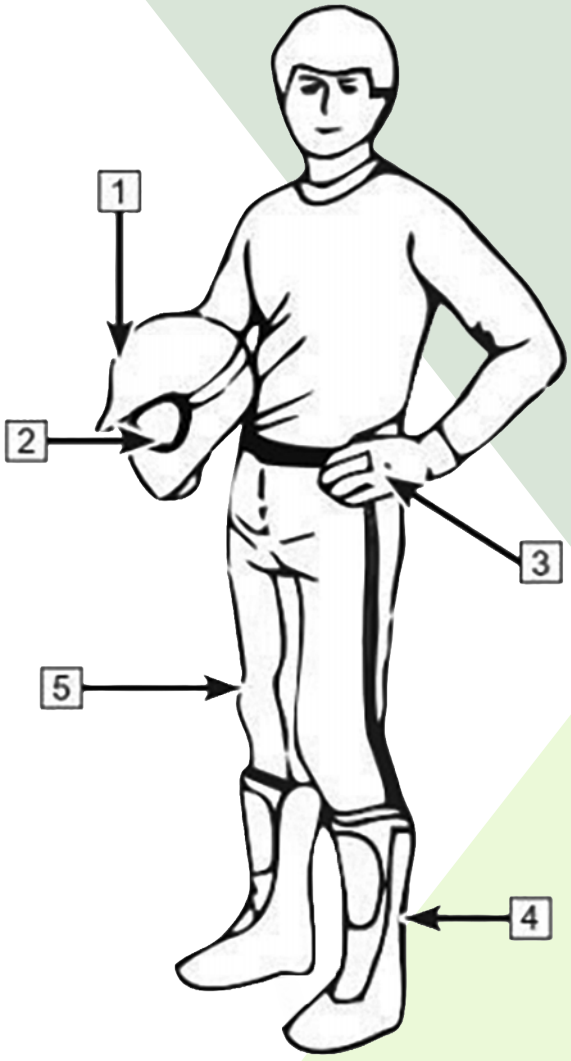

WARNING LABELS

144V ALL-WHEEL-DRIVE SABRE XR2 (LT-30DUD)

Configuration & Parameters

This car has been affixed with safety warning labels to protect your safety. Please carefully read and follow the instructions on each label. If the label is blurry or detached, please contact your dealer to purchase a replacement. Carefully read and follow the safety warning labels on the vehicle body, and refer to the warning labels in the instruction manual. According to different regions and regulations, the warning stickers in the manual are for reference only. Please refer to the actual warning stickers on the vehicle for accuracy.

NO. # #	SAFETY WARNING LABEL	POSITION
1	General Warning 	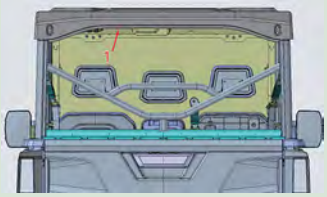
2	General Operating Warning 	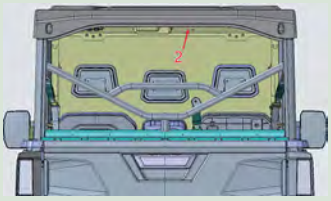
3	Passenger Warning 	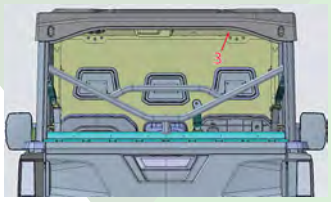
4	Pulling a Load Using the Cage 	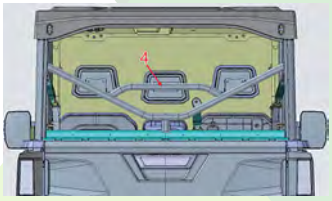

WARNING LABELS

5	2WD / 4WD / Front Diff Lock Selection —Warning Label 	
6	Tire Pressure & Maximum Load 	
7	Rollover — Warning Labels  *Left-Hand Side*  *Right-Hand Side*	
8	Door —Warning Labels — Half Doors  	 
9	Off-Road Usage — Warning Label 	
10	Cargo Box Pinch Point — Warning Label 	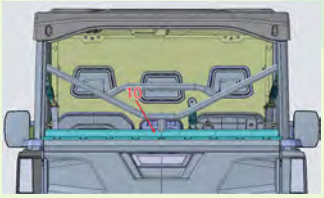

WARNING LABELS

11	Pulling a Trailer —Warning Label 	
12	Towing & Tongue Weight — Warning Label 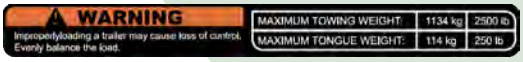	
13	High Voltage — Warning Label 	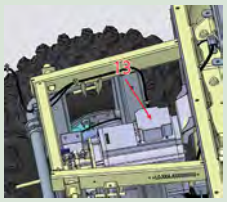
14	Charge Port — Warning Label 	
15	Service Disconnect — Warning Label 	
16	Pressure Washing — Warning Label 	

WARNING LABELS

Potential Danger Warning

⚠ WARNING

Potential Hazards

If the driver does not know how to operate the vehicle correctly in different situations and types of terrain, it greatly increases the risk of accidents.

How to Avoid Danger

If the dealer holds a safety driving training course, novice or inexperienced operators should complete the learning and regularly practice the skills learned in the course as well as the operating techniques described in this user manual.

⚠ WARNING

Potential Hazards

If minors under the minimum age requirement operate this vehicle, serious injury or death accidents may occur. Even if the child is within the age range recommended for using this vehicle, they may not yet possess the skills, abilities, or judgment to safely operate the vehicle, which could result in accidents or injuries.

How to Avoid Danger

Minors under the age of 18 are prohibited from operating this vehicle.

⚠ WARNING

Potential Hazards

If passengers are not seated properly, they may be accidentally ejected from the car or come into contact with moving objects, both of which can result in serious injury or death.

How to Avoid Danger

It is prohibited to carry more than 2 passengers. Total occupants should not exceed 1 driver and 2 passengers.

⚠ WARNING

Potential Hazards

All terrain tires are designed for off-road use, and driving on paved roads can greatly affect how the vehicle is handled, leading to loss of control or accidents.

How to Avoid Danger

Do not drive the vehicle on paved roads. If unavoidable, reduce the speed and ensure that no emergency turns or braking are performed. If regulations do not allow it, please do not drive on highways or streets. Please consult local laws to determine if it is legal.

WARNING LABELS

⚠ WARNING

Potential Hazards

Not wearing a certified helmet while driving increases the risk of serious head injury or death in the event of an accident; Not wearing eye protection while driving may lead to accidents and increase the likelihood of serious eye injuries in the event of an accident; Not wearing protective clothing while driving increases the likelihood of serious bodily injury

How to Avoid Danger

Always wear a well fitted and certified helmet, eye protection device (goggles or face mask), gloves, long sleeved shirt or jacket, pants, and boots.

⚠ WARNING

Potential Hazards

Drinking alcohol or taking medication can seriously affect the operator's judgment ability, reaction time may be slower, and the operator's balance and perception may also be affected. Drinking alcohol or taking medication before or at the time of operating the vehicle may result in injury or fatal accidents.

How to Avoid Danger

Do not drink alcohol or take medication before or at the time of operating this vehicle.

⚠ WARNING

Potential Hazards

Speeding increases the likelihood of the driver losing control, leading to accidents.

How to Avoid Danger

Drive the vehicle at a speed that is suitable for the current terrain, visibility, driving conditions, and in line with your driving experience.

⚠ WARNING

Potential Hazards

Trying stunt actions will increase the probability of accidents, including rollovers.

How to Avoid Danger

Do not attempt to perform tire skating, jumping, or other stunts.

WARNING LABELS

⚠ WARNING

Potential Hazards

Insufficient maintenance can increase the likelihood of accidents or equipment malfunctions.

How to Avoid Danger

Check the vehicle before each use to ensure that it is in safe operating conditions. Always follow the inspection and maintenance procedures and plans specified in this user manual to inspect and maintain the vehicle.

⚠ WARNING

Potential Hazards

Once a vehicle overturns or rolls in an accident, it can cause serious injuries to the arms, hands, or legs.

How to Avoid Danger

Always keep your arms, hands or legs inside the vehicle while driving, with your hands on the steering wheel or handlebars and your feet on the foot pedals.

⚠ WARNING

Potential Hazards

Unfamiliar terrain may have hidden rocks, raised slopes, or holes, all of which can lead to vehicle loss of control or overturning.

How to Avoid Danger

When operating on unfamiliar terrain, slow down the speed and be extra careful, always be alert to changes in terrain.

⚠ WARNING

Potential Hazards

Incorrect steering may cause the vehicle to lose control and result in a collision or rollover.

How to Avoid Danger

Follow the correct steering procedure described in this user manual and practice low-speed steering before attempting to turn faster. Do not turn at excessive speed.

⚠ WARNING

Potential Hazards

When driving on excessively rough, smooth, or soft terrain, it may cause a loss of traction or control, which can lead to accidents or rollovers.

How to Avoid Danger

Do not operate on overly rough, smooth, or soft terrain unless you have practiced or learned the necessary techniques for controlling the vehicle on such terrain. Pay more attention to rough, smooth, or soft terrain.

WARNING LABELS

⚠ WARNING

Potential Hazards

Incorrect climbing may lead to loss of control or overturning.

How to Avoid Danger

Do not operate the vehicle on steep slopes beyond your ability range. Practice on small slopes before attempting larger ones. Before climbing any mountain slope, be sure to carefully check the terrain and avoid climbing on overly smooth or soft slopes. Do not suddenly turn on the accelerator pedal while uphill, as it may cause the vehicle to roll backwards. Do not climb over the mountain top at high speed, as there may be obstacles on the other side of the mountain, steep downhill terrain, other vehicles or pedestrians.

⚠ WARNING

Potential Hazards

Incorrect downhill operations can cause loss of control or overturning.

How to Avoid Danger

Do not operate the vehicle on steep slopes beyond your ability range. Practice on small slopes before attempting larger ones. Before climbing any mountain slope, be sure to carefully check the terrain and avoid climbing on overly smooth or soft slopes. Be careful: Before going downhill, carefully check the terrain, do not go downhill at high speed, avoid tilting when going downhill, and try to go downhill straight as much as possible.

⚠ WARNING

Potential Hazards

Incorrect crossing or turning on a hillside can cause loss of control or overturning.

How to Avoid Danger

Be extra careful when turning on any hillside and avoid crossing on the side of steep slopes. When crossing the side of a mountain slope: Always follow the correct operating procedures described in this user manual to avoid excessively smooth or soft mountain slopes.

⚠ WARNING

Potential Hazards

Stall while climbing, slide backwards

How to Avoid Danger

Maintain a stable speed while climbing hills. If all forward speeds are lost: Turn off the accelerator pedal, apply the brakes, and shift the gear to the parking position when the vehicle comes to a complete stop. If the car starts to slide: When sliding backwards, be careful to apply the foot brake. When the car comes to a complete stop, hold the brake and shift the gear to the parking position, and determine the best way to safely change direction.

WARNING LABELS

⚠ WARNING

Potential Hazards

Crossing obstacles can cause loss of control or overturning.

How to Avoid Danger

Before operating in a new area, check for obstacles and avoid crossing large obstacles such as rocks and fallen trees. If unavoidable, be very cautious and follow the correct procedures listed in this user manual.

⚠ WARNING

Potential Hazards

Sliding or skidding can cause loss of control, and if the tires unexpectedly regain traction, the vehicle may overturn.

How to Avoid Danger

On smooth roads such as ice, ride slowly and be careful to reduce the chance of losing control due to sliding or sliding.

⚠ WARNING

Potential Hazards

Overloading of vehicles or trailers can cause changes in vehicle handling, leading to loss of control or accidents.

How to Avoid Danger

Do not exceed the rated load of the vehicle. The goods should be distributed correctly and securely fixed. When carrying goods or towing a trailer, the speed should be reduced and the vehicle should be kept in low gear at all times. Maintain a greater braking distance and always follow the instructions in this user manual when transporting goods or towing a trailer.

⚠ WARNING

Potential Hazards

Operating vehicles in deep or fast flowing waters, tires may float, causing the vehicle to lose control and traction, which can lead to accidents or rollovers.

How to Avoid Danger

Avoid operating in deep or fast water areas. If it is impossible to avoid entering deeper than the rated maximum depth, please drive slowly, carefully maintain center of gravity balance, avoid sudden movements, and maintain a low-speed stable forward motion. Do not make sudden turns or stops, and do not change the accelerator pedal suddenly. Wet braking will reduce braking performance. After leaving the water, it is necessary to test the braking several times. If necessary, brake several times at low speeds to dry the brake pads.

WARNING LABELS

⚠ WARNING

Potential Hazards

Incorrect operation of reverse gear, the car may collide with objects or people, causing serious injuries.

How to Avoid Danger

Before shifting gears, check if there are any obstacles or personnel behind the vehicle, and if safe, move slowly backwards.

⚠ WARNING

Potential Hazards

Driving a vehicle with incorrect tires, or with incorrect or uneven tire pressure. Using incorrect tires or driving a vehicle with incorrect or uneven tire pressure can lead to loss of control or accidents.

How to Avoid Danger

Use the tire size and type specified in this user manual to maintain the correct tire pressure at all times.

⚠ WARNING

Potential Hazards

Operate vehicles that have undergone non-standard modifications. Incorrect installation of accessories or modification of vehicles can cause changes in handling, which may lead to accidents.

How to Avoid Danger

It is not allowed to modify the vehicle through incorrect installation or use of accessories. All accessories added to the vehicle must be original accessories or equivalent components specifically designed for use on this model, and must be installed and used in accordance with the approved instructions. For more information, please contact your dealer.

⚠ WARNING

Potential Hazards

Do not operate vehicles on frozen water bodies. If a vehicle overturns on ice, it can cause serious injury or fatal accidents

How to Avoid Danger

Do not operate vehicles on frozen water bodies.

⚠ WARNING

Leaving the key in the switch may result in unauthorized use of the vehicle, potentially leading to serious injury or fatal accidents. Please be sure to remove the vehicle key when it is not in use.

WARNING LABELS

⚠ WARNING

After any rollover or accident, have a qualified service dealer inspect the entire vehicle for damage, including, but not limited to, the brakes, accelerator pedal, and steering system.

⚠ WARNING

Safe operation of this vehicle requires good judgment and physical skills. People with cognitive or physical disabilities who operate this vehicle may increase the risk of rollover and loss of control, which may lead to serious injuries or fatal accidents.

VEHICLE STRUCTURE

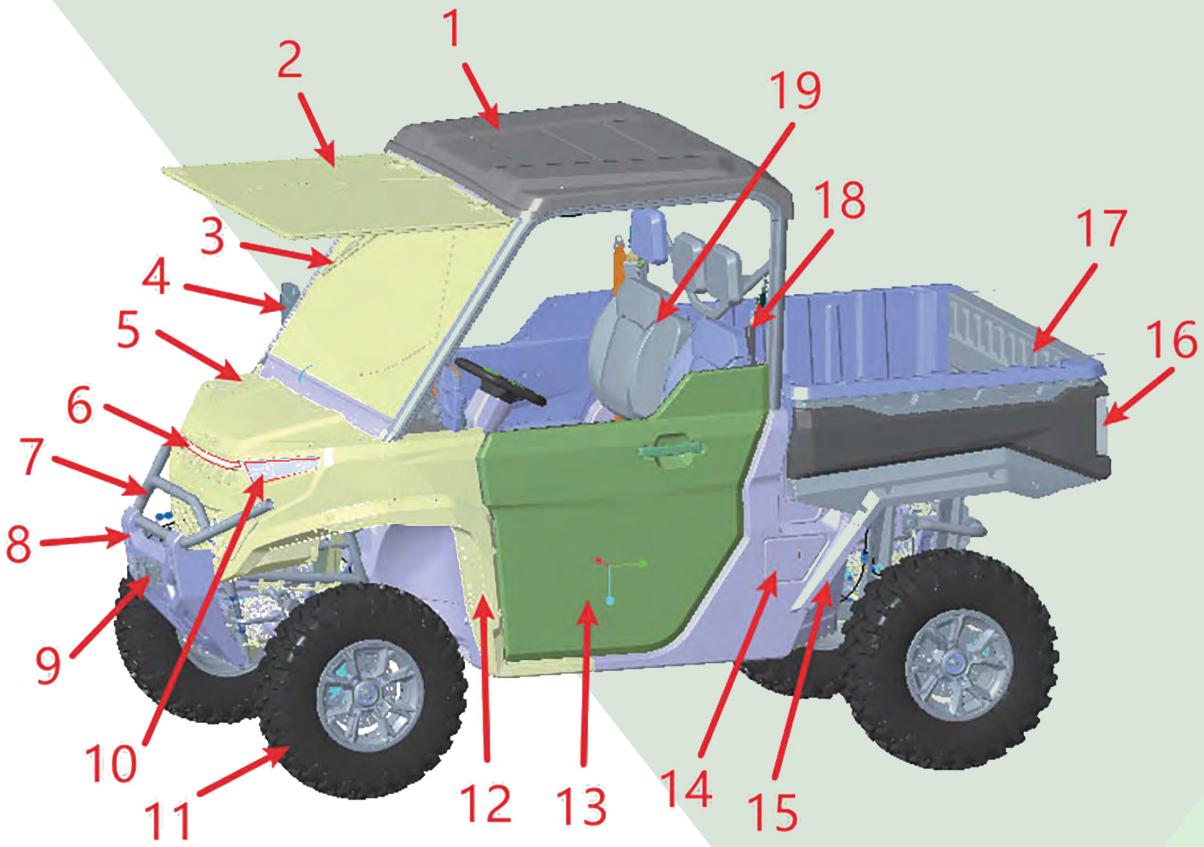

SERIAL #	NAME	SERIAL #	NAME
1	Canopy	11	Tire
2	Adjustable Front Windshield	12	Front Fender
3	Windshield Wiper	13	Car Door
4	Rear-View Mirror	14	Charging Port
5	Front Cover	15	Rear Wheel Arch
6	Penetrating Daytime Running Light	16	Rear Tail Light
7	Iron Front Bumper	17	Rear Cargo Box
8	Front Bumper	18	Seat Belt
9	Winch	19	Seat
10	Headlight		

MAIN COMPONENTS

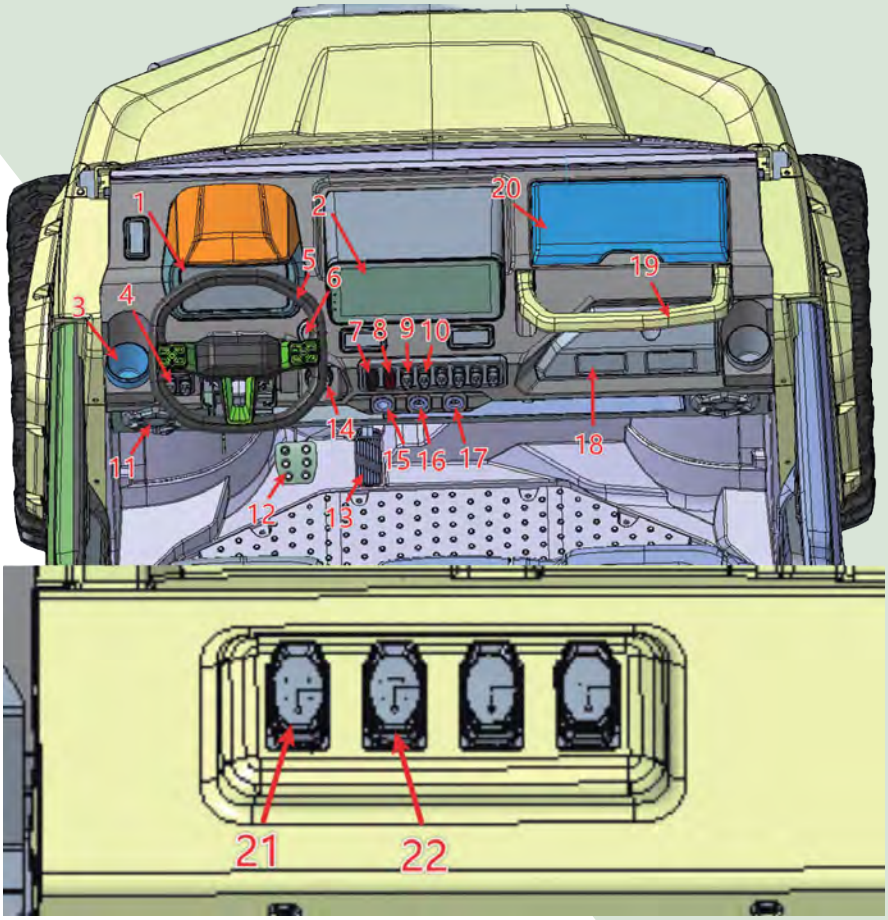

SERIAL #	NAME	SERIAL #	NAME
1	Dashboard	12	Brake Pedal
2	Multimedia Car Infotainment System	13	Accelerator Pedal
3	Cup Holder	14	Electronic Shifter
4	Power Switch	15	USB
5	Multi Functional Steering Wheel	16	Lighter
6	Electric Lock	17	USB Communication Head Power Supply/USB
7	Parking Switch	18	Glove Box
8	Warning Light Switch	19	Safety Handrail
9	Top Pump Switch	20	Storage Box
10	Traction Switch	21	Wiper Switch
11	Speaker	22	Spotlight Switch

MAIN COMPONENTS

1. ELECTRONIC PARKING (EPB)

This car comes standard with electronic parking, and the electronic parking switch is located below the multimedia center.



Manual Parking

When the vehicle is stationary, pull up the electronic parking switch, the electronic parking indicator light on the dashboard will light up (Ⓟ), and the electronic parking caliper will work to complete the parking of the vehicle.

Manual Release

When the vehicle is parked, press the brake pedal and then press the electronic parking switch. The electronic parking indicator light on the dashboard will turn off, and the electronic parking caliper will work to release the vehicle from parking.

EPB System Function Table

BASIC FUNCTIONS	NECESSARY CONDITIONS *(Simultaneously Met)*	TRIGGER CONDITION
Manual Parking	1. Vehicle speed<2.2 mph 2. Release state 3. IGN ON/IGN OFF (Within 10 minutes)	Pull up the parking button. After 10 minutes of IGN OFF, the button needs to be pulled up until the parking lights are on
Manual Release	1. IGN ON 2. Press and hold the brake pedal or the accelerator pedal (if both the brake and accelerator pedals are malfunctioning, simply press the parking button to release them. If one of the signals is malfunctioning, the signal condition must be met before pressing the parking button to release it.) 3. Parking status	Press the parking button
Auto Hold	1. IGN ON 2. Auto Mode 3. The system is in a released state 4. Release button not pressed 5. Vehicle speed<3.5kmph	IGN ON → IGN OFF The driver's door is open
Auto-Release	1. IGN ON 2. Automatic mode 3. Parking status 4. The driver's seat belt is fastened 5. The driver's door is closed 6. Forward or reverse gear 7. Motor speed > 500rpm	1. >5% slope, lift the clutch pedal while pressing the accelerator pedal, when the driving torque output reaches the resistance torque 2. ≤5% slope, lift the clutch pedal while pressing the accelerator pedal
Dynamic parking start	1. Speed ≥3.5 KPH 2. Release State	Pull up the parking button and hold it

MAIN COMPONENTS

Dynamic parking release	1. Dynamic parking status	Release the parking button
Repair Release (Fault release)	1. IGN ON 2. Step on the brake pedal (this signal is not required when the brake pedal signal is faulty)	Press and hold the parking button for 10-15 seconds. Release the button immediately (<1 second) and then press the parking button again
Fault Parking	1. Release state 2. Vehicle speed signal malfunction (ABS or CAN bus malfunction, IGN OFF status)	Pull up the parking button and hold it (the controller first applies a small parking force to the brake, then gradually increases the parking force until the parking is successful. If the parking button is released before the parking is successful, the brake will be released.)

AUXILIARY FUNCTION	NECESSARY CONDITIONS *(Simultaneously Met)*	TRIGGER CONDITION
Prevent Slope Sliding	1. Controller without malfunction 2. Parking successful	If wheel speed signal is detected within 10 minutes (up to 2 times after successful parking)
Automatic Gap Compensation	1. Continuous driving for 1000km or more without any parking action 2. Speed<3.5kmph	IGN ON → IGN OFF (Release immediately after parking, with a parking current of 10A)
Re Clamp the Hot Plate	1. Used dynamic parking function 2. Predict that the disc temperature exceeds the software set value during braking	IGN OFF Automatically clamp in batches at the specified time afterwards

INDICATOR LIGHT	STATUS DESCRIPTION	INDICATOR LIGHT WORKING STATUS
Parking Light	Parking successful, ignition switch on or off within 5 seconds	Parking lights on
Parking Light	Parking failure, ignition switch on or off within 10 minutes	Parking lights flashing
Mode Indicator Light	Automatic mode, ignition switch on or off within 5 seconds	The mode indicator light is on

⚠ WARNING
It is advisable to avoid using the emergency braking function as much as possible. Using the emergency braking function on steep bends, poor road conditions, or winter roads may cause the vehicle to spin and slide.

MAIN COMPONENTS

2. MULTI FUNCTIONAL STEERING WHEEL

The multifunctional steering wheel is located in front of the driver's seat, and the steering wheel rotates the vehicle to the left or right, turning the steering wheel to the target direction.

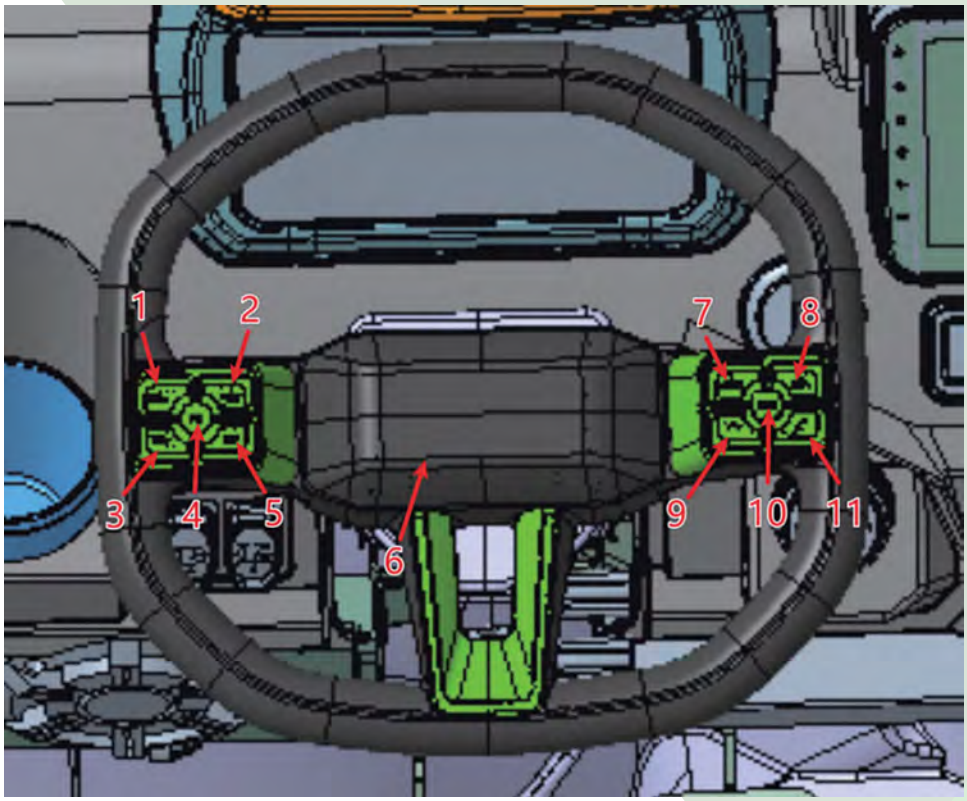

Multi Functional Steering Wheel Button Function Description

SERIAL #	FUNCTIONAL DESCRIPTION	SERIAL #	FUNCTIONAL DESCRIPTION
1	Volume –	7	Previous Song
2	Volume +	8	Next Song
3	Left Turn Signal	9	High Beam
4	Confirm	10	Return
5	Low Beam	11	Right Turn Light
6	Horn		

MAIN COMPONENTS

3. TILT LEVER AND STEERING WHEEL LOCK

The feature of the tilt lever is that it can adjust the steering wheel to suit different drivers. Pull up the lever and adjust the steering wheel to a comfortable angle.

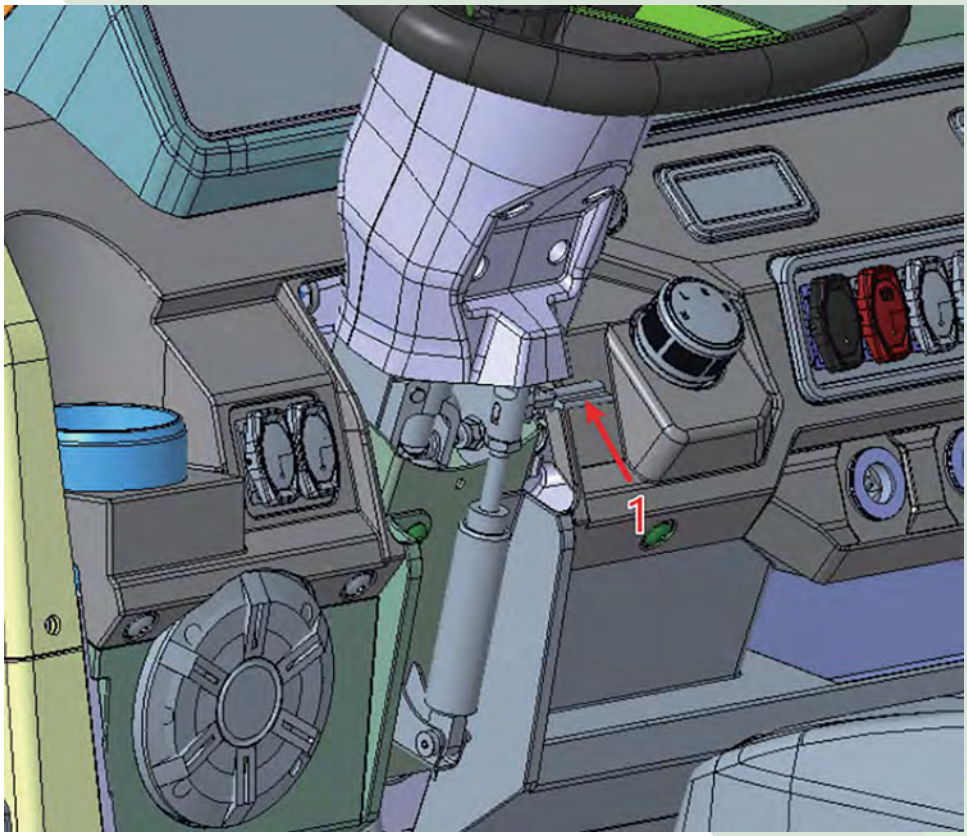

Steering Wheel Adjustment

The height of the steering wheel can be adjusted to suit the driving habits of different drivers. To adjust upwards, grab the locking handle (1) with your right hand and pull out the handle outward, while holding the steering wheel with your left hand. When the steering wheel rises to the appropriate position, release the locking handle with your right hand to lock the steering wheel. Downward adjustment: Hold the locking handle (1) with your right hand and pull out the handle outward. At the same time, hold the steering wheel with your left hand and press it down to the appropriate position. Release the locking handle with your right hand to lock the steering wheel.

ATTENTION
After adjusting the steering wheel, gently shake it up and down to confirm if it is locked. If the steering wheel cannot be locked, please go to an authorized Aries EV after-sales center for repair in a timely manner. For your safety reasons, the steering wheel must be adjusted while the vehicle is stopped and in the “N” or “P” gear position.

MAIN COMPONENTS

4. ELECTRONIC SHIFTER

Electronic shifter (1) is located in front of the driver's seat and is used to change the transmission gear. When the vehicle is powered on or started (to meet the vehicle's stop state), press the brake pedal and rotate the gear knob of the desired gear to complete the shifting operation.

- D – In forward gear, stepping on the accelerator pedal can output power to propel the vehicle forward.
- N – Neutral, there is no power output from the drive motor in neutral position.
- R – Reverse gear, the vehicle can move backwards when in reverse gear.
- P – Park gear, the drive motor for the park gear has no power output, and there is a locking mechanism intervening to prevent the vehicle from moving.



Parking

After the vehicle comes to a safe stop, no matter what gear the vehicle was in before, turn off the engine and remove the key. The vehicle will automatically park and the shifting system will automatically enter the P gear; When the vehicle is parked on a sloping hill, block the side where the wheels and trailer wheels may move.

ATTENTION

When the battery runs out of power, it can cause gear shifting failure. Please charge the battery or connect an external power source in a timely manner before shifting.

Be careful when reversing, the vehicle is restricted, so the reverse speed is limited to below 6.2 mph;

⚠ WARNING

Be extremely careful when using reverse gear when going downhill, as gravity will increase the speed beyond the limit of reverse gear.

⚠ WARNING

When not operating the vehicle, switch the gear to P, pull up the electronic parking switch, and remove the key. When the vehicle is parked on a sloping hill, block the side where the wheels and trailer wheels may move.

MAIN COMPONENTS

5. ELECTRONIC ACCELERATOR PEDAL

The electronic accelerator pedal (1) is located on the right side of the brake pedal, and the vehicle speed is controlled by pressing the electronic accelerator pedal with the right foot. Be sure to check the accelerator pedal function before driving the vehicle.

Step on the accelerator pedal to accelerate the vehicle. When released, the spring pressure returns the pedal to its resting position. Before starting the motor, be sure to check if the accelerator pedal returns normally

6. BRAKE PEDAL

The brake pedal (2) is located on the left side of the accelerator pedal. When decelerating or parking, release the accelerator pedal and press the brake pedal.

When the brake pedal is pressed, the brake light lights up. Check the brake lights before each ride.

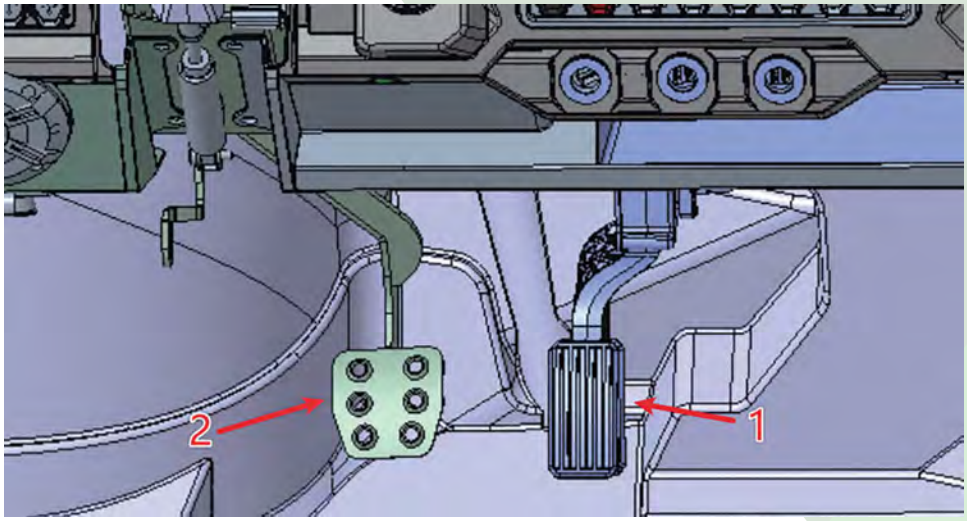

ATTENTION
If both the accelerator and brake pedals are pressed simultaneously, the motor power may be limited.

MAIN COMPONENTS

7. SEAT BELT

This car is equipped with three-point thigh and diagonal seat belts for the driver and passengers. Before operating the vehicle, ensure that all passenger seat belts are securely fastened

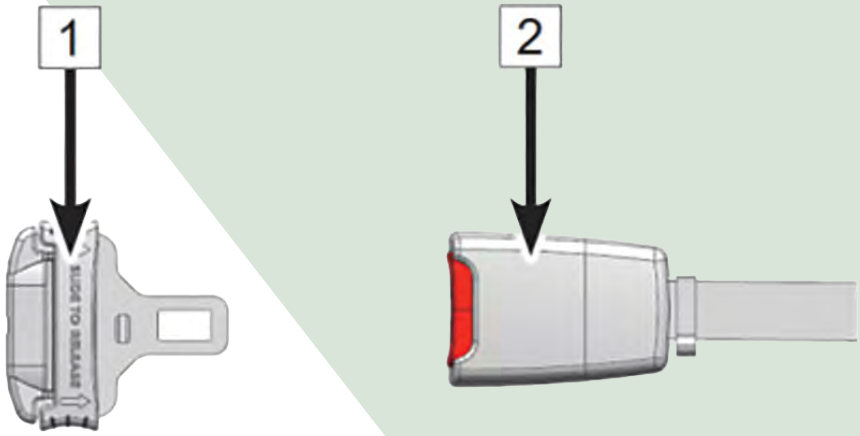

⚠ WARNING

Falling off a moving vehicle can result in serious injury or fatal accidents. Be sure to fasten your seat belt before operating or riding the vehicle

Please Fasten Your Seat Belt Correctly & Follow These Steps

- For three-point seat belts, pull down the seat belt tongue (1) and thread the buckle towards the edge of the seat cushion downwards through the chest. The seat belt should comfortably pass diagonally through the buttocks and chest. Ensure that the seat belt is not twisted.
- Insert the locking tongue (1) into the locking buckle (2) until a clicking sound is heard.
- Release some belts, they will automatically lock.
- To unfasten the seat belt, press the square red button at the center of the buckle.

⚠ WARNING

In the event of an accident, the seat belt will strongly press down on the lower abdomen, increasing the risk of injury. The shoulder of the seat belt should be adjusted to the most suitable position for oneself, and at the same time, it should be tightened as much as possible, otherwise it will reduce the effectiveness of the seat belt and increase the risk of injury

MAIN COMPONENTS

8. LCD INSTRUMENT CLUSTER

The instrument is installed on the instrument panel body, located directly in front of the driver's seat, and is divided into two functional areas:

1. Instrument indicator and warning light area
2. Instrument display screen area



ATTENTION

With changes in instrument function calls, version updates, vehicle configurations, etc., the content of the instrument panel may change. Please refer to your actual vehicle for selective viewing

When the vehicle is powered on, the instrument display screen shows a startup animation and the indicator light briefly lights up to perform a functional self-test. At this point, if you touch the screen or operate the knob on the function switch, it will not work until the startup animation is completed.

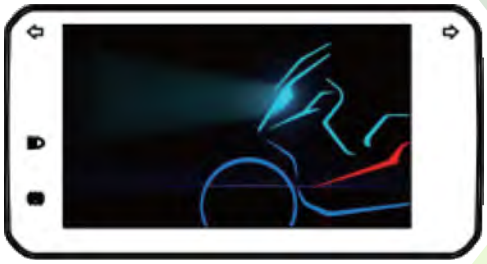

MAIN COMPONENTS

#	INDICATOR LIGHT	FUNCTIONAL DESCRIPTION
1		Left turn light: When the left turn light button is pressed on the multifunction steering wheel, the left turn indicator light will turn on.
2		Right turn light: When the right turn light button is pressed on the multifunction steering wheel, the right turn indicator light will turn on.
3		High beam: When the high beam button is pressed on the multifunction steering wheel, the high beam indicator light will turn on.
4		Low beam: When the low beam button is pressed on the multifunction steering wheel, the low beam indicator light will turn on.
5		Charging light: When the charging cable is successfully connected to the vehicle through the charging port, this indicator light will turn on.
6		Liquid level warning light: When the brake fluid level is too low, the indicator light will turn on. Please add an appropriate amount of DOT4 brake fluid as soon as possible and contact the dealer. Low brake fluid may allow air to enter the brake system, causing brake failure and serious consequences.
7	READY	READY light: This indicator light lights up when the vehicle's power system is ready.
8	ABS	ABS indicator light: If this light illuminates during driving, it indicates a malfunction in the Anti lock Braking System (ABS). At this time, although the vehicle has normal braking ability, it does not have anti lock braking function. Please drive carefully and contact the Aries EV dealer as soon as possible.
9		Rear axle differential lock status light: When this light is on, it indicates that the rear axle differential lock locking mode has been activated.
10		Front axle differential lock status light: When this light is on, it indicates that the front axle differential lock locking mode has been activated.
11		Seat belt unfastened warning light: If the driver or passenger fails to fasten their seat belt, this light will turn on, indicating a normal state and no malfunction. Only when both the driver and passengers fasten their seat belts, this light will turn off and the alarm will be cleared.
12		Seat sensor: When a person sits in the seat, the seat sensor light goes out. This function is a prerequisite for detecting whether the passenger is wearing a seat belt. When the driver leaves the seat without parking, the indicator light will light up and the alarm will sound.
13		Cruise control indicator light: When the cruise control function of the vehicle is turned on, this light lights up in white, which is a normal state and the vehicle has no faults.
14		Electronic parking indicator light: When the electronic parking switch is pulled up, the electronic parking caliper works to park the vehicle, and the electronic parking indicator light on the instrument panel lights up at the same time. When the parking is released, the indicator light goes out.
15		Brake light: When the brake pedal is pressed, the brake light lights up, and the brake light on the instrument panel also lights up.
16		Hill descent indicator light: Press the hill descent assist brake button on the multimedia car console to activate this function, and the indicator light will remain on after activation. During the downhill process, you only need to reduce the speed to a suitable range, the downhill auxiliary braking function will start working, and control the vehicle speed to maintain a safe level.
17		ACC accelerator pedal malfunction light: When the accelerator pedal malfunction light on the instrument panel lights up, the surface accelerator pedal is malfunctioning and driving is restricted. Please contact the Aries EV dealer as soon as possible.

MAIN COMPONENTS

18	BRAKE	Brake pedal malfunction light: When the brake pedal malfunction light on the instrument panel lights up, the surface brake pedal is malfunctioning, braking is restricted, and contact the Aries EV dealer as soon as possible.
19	OBC	OBC fault light: When the on-board charger malfunctions and cannot charge, the OBC fault light on the instrument panel will light up, and contact the Aries EV dealer as soon as possible.
20		EPS malfunction light: When the electric power steering system malfunctions, this light illuminates. If this light is constantly on while the vehicle is driving, please reduce the speed in a timely manner and safely park on the roadside. Turn off the engine for 5 minutes and restart it. If this light no longer lights up, you can drive normally. If this light still stays on, please contact the Aries EV dealer as soon as possible.
21	DCDC	DCDC fault light: When the DC-DC converter fails and the vehicle cannot start normally, this light will turn on.
22		EPB malfunction light: When the electronic parking caliper or electronic parking controller malfunctions and cannot park, this light will turn on.
23		12V battery under voltage fault light: This light comes on when the battery is depleted or damaged.

INSTRUMENT DISPLAY SCREEN AREA

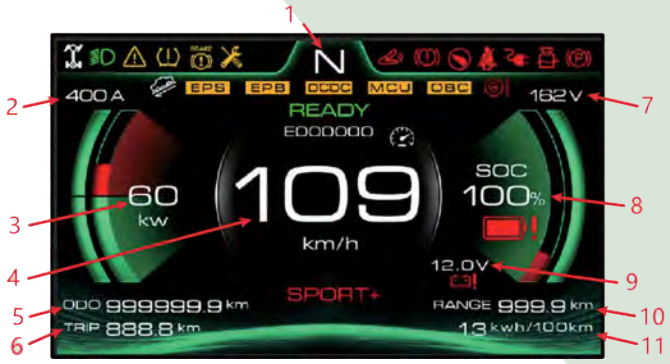

1	Gear Indicator Light	Display the current gear of the vehicle
2	Current Information	Display the current level of the vehicle
3	Power Information	Display the power level of the current vehicle
4	Speed Information	Display the current vehicle speed
5	Total Mileage	Display the total mileage of the vehicle
6	Subtotal Mileage	The odometer records the distance traveled. If you need to record the mileage of a specific journey, reset the instrument to zero before driving
7	Voltage Information	Display the voltage level of the current vehicle
8	Battery Level Info.	Display the current battery level, highlighted in red when the battery level is less than 20%
9	Battery Voltage	Display battery voltage
10	Range Information	Display the remaining driving range of the battery
11	Avg. Energy Consumption	Display the average battery consumption for subtotal mileage and driving distance

MAIN COMPONENTS

9. MULTIMEDIA CAR INFOTAINMENT SYSTEM



Power-Up Logo

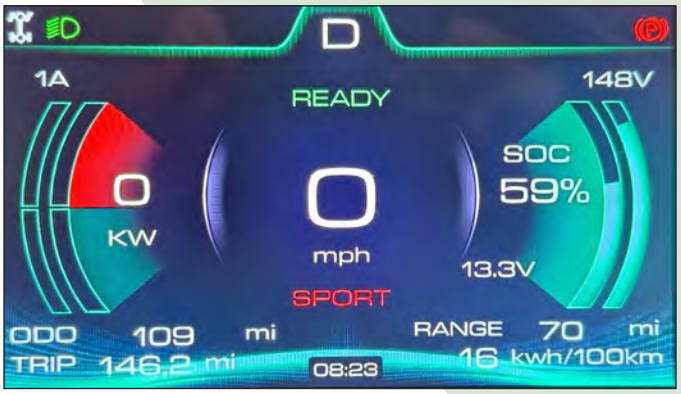

Instrument Interface



Instrument Interface

MAIN COMPONENTS



10. REAR CARGO BOX

The vehicle is equipped with a cargo box for storing goods.

Press the upper pump switch on the center console to tilt the cargo box (maximum tilt angle: 40°).

This feature can be used to access the rear parts of the vehicle for maintenance or to unload goods.

11. SEAT

The main and auxiliary seats are ergonomic foam leather seats. Pull up the pull rod (1) under the seat cushion to adjust the seat position fore and aft.

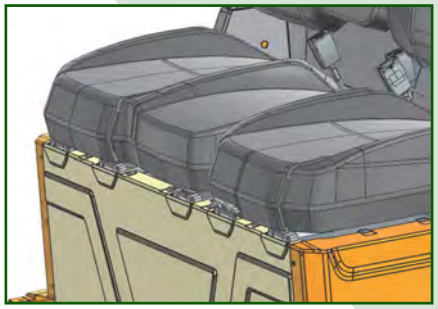

12. CAPSTAN

The vehicle bumper is equipped with a 4500 pound winch, and there is a traction switch on the center console that can control the tightening or loosening of the traction wire on the winch. Please read the winch operation section of this manual before operating the vehicle. For the correct use of the winch, please contact your dealer.

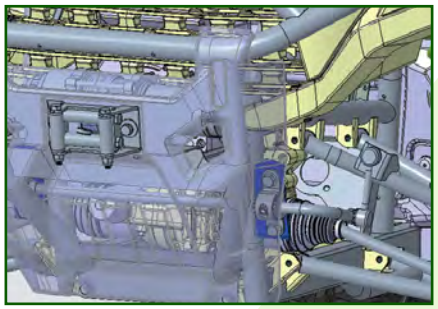

MAIN COMPONENTS

13. CHARGING PORT

The main and auxiliary seats are ergonomic foam leather seats. Pull up the pull rod (1) under the seat cushion to adjust the seat position fore and aft.

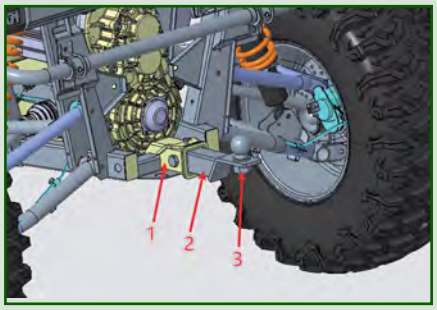

ATTENTION

Before operation, ensure that the charging port cover and charging door are fully secured. Operating the vehicle with either one open may cause dirt and debris to damage the terminals.

Charging Gun Operation Process

1. Park the vehicle on a flat road surface
2. Set the gear selector to park gear (Ⓟ)
3. Suggest keeping the vehicle in a non READY state
4. The charging compartment door (1)

⚠ WARNING

Ensure to wipe off any accumulated soil or debris inside or around the charging compartment. Do not use bare metal leaks or other non insulated tools for cleaning. Clean the charging compartment with compressed air, cloth, or (if necessary) low pressure water.

5. Open the charging port cover (2)
6. Insert charging plug (3) into the charger socket. Once the vehicle starts charging:
   - The vehicle display screen will switch to the charging screen
   - The vehicle will continue to charge until fully charged
   - When connecting the charging plug, the vehicle will not be able to travel
   - The charging rate may decrease due to the influence of ambient temperature
7. After preparing to resume operation, release the charging gun
8. Reinstall the charging port cover and close the charging compartment

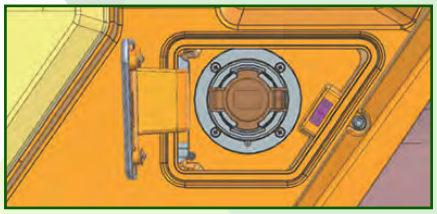



PRE-OPERATION CHECK

The best usage habit before each use of the vehicle is to conduct a vehicle inspection according to the “Daily Inspection before Driving” table in the maintenance section of this manual.

⚠ WARNING

If not checked correctly before each use, it may result in serious vehicle malfunctions, serious injuries to personnel, or fatal accidents. Please make sure to inspect the vehicle and ensure that it is in the correct operating conditions before each use

Accelerator Pedal

Before starting the vehicle, check the accelerator pedal and ensure that it can be operated flexibly. Adjust the speed by adjusting the pedal position. Because the accelerator pedal is an electronically operated mechanism controlled by VCU, the vehicle will slow down at any time when the foot leaves the accelerator pedal.

Brake Pedal

Before operating the vehicle, press the brake pedal to perform front and rear braking. When pressed, the brake lever or pedal should feel firm. A soft brake pedal may indicate brake fluid leakage or low brake fluid in the main pump. It should be corrected before riding and the dealer should be contacted for correct diagnosis and repair.

Shift Gears

⚠ WARNING

To avoid transmission failure, return the accelerator pedal to the off position before shifting gears, stop the vehicle, and press the brake pedal before shifting gears.

Shift From Park Gear

1. Confirm that the accelerator pedal is released
2. Step on the brake pedal and turn the gear selector knob

Shift: Neutral to Forward

1. Confirm that the accelerator pedal is turned off and the entire vehicle comes to a complete stop
2. Step on the brake pedal and turn the gear selector knob to “D”

PRE-OPERATION CHECK

Shift to Reverse Gear

1. Confirm that the accelerator pedal is closed and the vehicle is completely stopped
2. Step on the brake pedal and turn the gear selector knob to “R”
3. Check for people or objects behind you and release the rear brake pedal to ensure safety
4. Slowly press the accelerator pedal and continuously look back while moving backwards to ensure safety

⚠ WARNING

Before shifting to reverse gear, ensure that there are no objects or people behind and that the area behind the vehicle is safe. When it is safe to reverse, please drive slowly.

Shift to Park

1. Confirm that the accelerator pedal is released and the vehicle is completely stopped
2. Step on the brake pedal and press the electronic parking switch button ‘P’
3. Push the cart forward and backward to verify if the vehicle has been parked successfully

Note

The shift indicator light should display the gear according to the actual gear position. If the indicator light does not display, please contact the dealer to check the vehicle circuit or adjust the shift system.

SAFE OPERATION

Operator Responsibilities

As a vehicle operator, your common sense, judgment, and skills are the only factors that prevent yourself and others from getting injured, and the vehicle or environment from being damaged.

Entertainment, Group & Long-Distance Cycling

One of the advantages of this car is that it can take you off-road far away from most communities. Please stay away from areas specifically designed for other types of off-road use, including snowmobile trails, equestrian trails, ski trails, mountain bike trails, etc., unless otherwise permitted. You can join a local UTV club, which will provide a map and recommendations, or notify you of which areas are available for cycling. During group cycling, please maintain a safe distance from vehicles in front and behind, and do not drive carelessly or engage in unplanned exercises with nearby vehicles. Please ride within the designated path and driving area, and prevent others from operating vehicles in unauthorized locations.

Prevent Accidents & Rollovers

The operation of multi-purpose terrain vehicles is different from other types of vehicles. Multipurpose terrain vehicles are designed for operation on off-road terrain (such as wheelbase and wheelbase, ground clearance, suspension, power transmission system, tires, etc.), so they may overturn when operated on paved or smooth terrain mainly used by other vehicles.

Sudden Movements

When making sudden movements it can quickly lead to a rollover or other accidents, such as:

- Emergency turning or aggressive acceleration
- Reduce speed sharply when turning
- Driving or crossing obstacles on a hillside

Even in flat and open areas, sudden movements or intense driving can cause a rollover or loss of control. If the vehicle rolls, any part of the body (such as arms, legs, or head) outside the cabin may be crushed and trapped by the car doors or other parts of the vehicle, and may also be injured by impacts from the ground, cab, or other objects.

Reduce the Risk of Rollover

- Be extra careful when turning
- Adjust the steering input based on speed and environment
- Reduce the speed before entering the turn
- Avoid sudden braking when turning
- Avoid sudden or rapid acceleration during turns, even from a stationary or low-speed state
- Do not attempt circular maneuvers, tire slippage, skidding, tail wagging, jumping, or other stunts

SAFE OPERATION

- If the vehicle starts to skid or slip, it should be turned towards the direction of the skid or slip.
- Do not forcefully apply the brakes and lock the wheels.
- This vehicle is mainly used for off-road use, and riding on paved roads may seriously affect vehicle handling. If it is necessary to
- When driving short distances on paved roads, please reduce your speed and avoid sudden turning, acceleration, or braking.

Slopes or Uneven Terrain

The car may roll over, rolling forward or backward on slopes or uneven terrain:

- Avoid walking on slopes (following slopes instead of going up and down them vertically). If possible, try to go straight up and down hills instead of crossing them. If you must drive on the side of a hill, be cautious and avoid smooth roads, obstacles, or depressions. If you feel the vehicle rolling or skidding, turn the steering wheel towards the downhill direction as much as possible.
- Avoid steep slopes and follow the operating procedures for uphill and downhill in this manual. Sudden changes in terrain, such as caves, depressions, embankments, soft or hard ground, or other irregular terrain, may cause vehicles to overturn or become unstable. Observe the terrain ahead and slow down in uneven terrain areas.

Carrying or Transporting Goods

The handling of vehicles when carrying or transporting goods is different:

- Reduce the speed of the vehicle and operate it according to the instructions in this manual for transporting or hauling goods
- Avoid mountain slopes and rugged terrain
- Reserve a larger braking distance

Prepare for Preventing a Rollover

- Close the car door and lock the seat belt to help prevent arms or legs from sticking out of the car.
- Do not grip the car door while driving, otherwise your hands may be crushed between the car door and the ground in the event of a rollover. Keep your hands on the steering wheel or armrest.
- Do not attempt to use your arms or legs to prevent a rollover. If you feel that the vehicle may overturn or roll over, the driver should keep both hands on the steering wheel and keep both feet firmly on the vehicle floor. Passengers should hold the handrails with both hands and keep their feet firmly on the vehicle floor.

Avoid Collision

When driving at high speeds, the risk of vehicle loss of control increases, especially when challenging off-road

SAFE OPERATION

terrain, and the risk of injury in collisions also greatly increases. Do not operate the vehicle at excessive speed. Drive the vehicle at a speed that is suitable for the terrain, visibility, operating conditions, and your driving experience. In the event of a collision, this car does not have the comprehensive protection of a car, such as no airbags, the cockpit is not completely wrapped, and there is no design specifically designed to prevent collisions with other vehicles. Therefore, it is extremely important to fasten the seat belt, close the car door, and wear appropriate riding equipment.

Environment

- Off road entertainment is a privilege, please respect the environment and the rights of others to enjoy the environment while maintaining your privilege.
- Chasing wild animals is illegal, and if chased by motor vehicles, wild animals will die from exhaustion.
- Do not intentionally damage the terrain unless the operating area is designated for such activities.
- Follow the rule of 'bring in, take out' and do not litter.

Practice

It is very important to familiarize oneself with the operation of the vehicle in a controllable environment before going out for a ride. Find a suitable area to practice and follow the application below. The venue should have a minimum range of 147x147 feet (45x45 meters) and ensure that there are no obstacles such as trees or large rocks.

Please remember: Before fully familiarizing yourself with operating your vehicle, avoid driving at high speeds.

Turn Direction Practice

Turning is one of the most common causes of accidents. If you turn or drive too fast, the vehicle is more likely to lose traction or overturn. Therefore, please reduce your speed in advance when approaching a turn.

- Firstly, learn how to handle slight right turns at very low speeds. Release the accelerator pedal before turning and slowly apply the accelerator pedal again
- Repeat the turning exercise, but this time keep the accelerator pedal unchanged while turning
- Finally, practice turning repeatedly while accelerating slowly
- Practice turning left

Pay attention to how your vehicle reacts in these different exercises. Aries EV suggests releasing the accelerator pedal before entering a turn to assist in starting the direction change. As the speed and steering deepen, you will feel an increase in lateral force, which should be kept as low as possible to ensure that the vehicle does not roll over.

SAFE OPERATION

U-Shaped Turning Practice

Slowly accelerate and while maintaining low speed, gradually turn the steering wheel to the right until a U-shaped turn is completed. Repeat the U-turn exercise while maintaining low speed using different steering inputs. Repeat the U-turn exercise to the left.

As mentioned earlier in this user manual, it is not allowed to drive on paved roads. The operating habits of vehicles vary and may increase the risk of rollover.

Braking Practice

Practice braking to become familiar with braking response:

- Firstly, practice braking at low speed, and then increase the speed
- Practice linear braking at different speeds and braking forces
- Practice emergency braking, the best braking is achieved in a straight line, using high braking force and not locking the wheels

Please remember that the braking distance depends on the vehicle speed, cargo capacity, and road surface type, while tires and braking conditions are also important factors

Reverse Gear Practice

Practice using reverse gear:

- Place a conical warning sign on each side of the rear wheel of the vehicle
- Move the vehicle forward until you can see the cone-shaped warning sign behind, then stop and determine the distance required to see obstacles behind you
- Learn how to operate the vehicle in reverse gear and how to react to steering inputs
- Always use low speed during reverse gear practice

Emergency Vehicle Shutdown Practice

Learn how to quickly stop a motor in emergency situations:

- When running at low speed, simply press the switch to the stall position. This is to familiarize you with the reaction of the car when the motor suddenly stalls during cycling and cultivate a conditioned reflex to this situation

OPERATING VEHICLE

Off Road Operation

Off road operations on very natural terrain are very dangerous, as terrain without specialized preparation for vehicle operation carries inherent dangers. The terrain material, shape, and steepness are unknown, and the terrain itself is a continuous danger factor. Anyone adventuring on this terrain must be aware of this.

When operating a vehicle on off-road terrain, the operator should be extremely cautious and carefully choose the safest path and maintain close observation of the terrain ahead. This vehicle should not be operated by anyone who is not fully familiar with its operating methods, nor should it be operated on very steep or dangerous terrain.

General Driving Skills

Caution, prudence, experience, and driving skills are the best precautions to prevent dangerous operation of vehicles. When there is a slight suspicion that the vehicle will safely cross obstacles or special terrain, choose a safer route. During off-road operations, power and traction are the most important factors, not speed. Do not drive faster than the visible distance and your ability, choose a safe route within the allowable range. If the control components are not working properly, do not operate the vehicle. Please go to the dealer for inspection.

Reverse Gear Operation

When operating reverse gear, check that there are no people or obstacles behind the two vehicles, pay attention to blind spots, and when everything is safe, reverse gear, maintain low speed and avoid emergency turns.

⚠ WARNING

Steering input during reverse gear operation increases the risk of rollover.

⚠ WARNING

When operating reverse gear on a downhill slope, gravity will increase the speed and exceed the reverse gear speed limit.
Careless operation during reverse gear operation can result in serious injury or fatal accidents.

Be Careful

This car is equipped with a reverse gear speed limit function. During reverse gear operation, the speed of the drive motor is limited. To ensure safety, please slowly and lightly step on the accelerator pedal and open it to a position where the desired speed can be maintained

OPERATING VEHICLE

Cross the Paved Road Surface

If you have to cross the paved road surface, ensure complete visibility on both sides of the road and determine the exit position on the other side of the road. Drive in a straight line towards the exit position and do not suddenly change direction or accelerate, as it may cause a rollover. Do not drive on sidewalks or bike lanes, as they are designated for pedestrian and bicycle use.

Driving on Paved Roads

Avoid driving on paved roads. This car is not designed for driving on paved roads, and there is a high possibility of a rollover accident on paved roads. If you must drive on paved roads, turn slowly and drive slowly to avoid sudden acceleration or braking.

Crossing Shallow Waters

Water may become a dangerous hazard, and if the water is too deep, the car may “float” and overturn. Before attempting to cross any water area, check the depth and flow of the water. The depth of the water should not exceed 13.8” in order to safely cross obstacles.

Be careful of unstable road surfaces such as rocks, grass, logs, etc., whether in water or on shore, they may lose traction.

Do not attempt to enter water at high speed, as water can affect the braking ability of the vehicle. After leaving the water, please ensure to drive the vehicle at low speed and apply the brakes several times to ensure that the brake pads are dry again.

How to Operate if Submerged in Water

Safely tow the vehicle to an open area, at least 49.2’ away from other structural components or flammable materials (such as other vehicles and personal property).

When the vehicle encounters power battery failure, insulation alarm and other faults after wading through water, please turn off the power and remove the key, and contact Aries EV authorized dealers.

Riding in Mud, Ice, or Snow

When conducting a pre cycling inspection, pay special attention to areas on the vehicle where mud, ice, or snow can easily accumulate, which may obstruct the visibility of the taillights, block the air vents, block the radiator and fan, and affect the flexible movement of control components. Before starting the vehicle, check that the steering, accelerator pedal, and brake pedal are operated flexibly without interference.

OPERATING VEHICLE

When a vehicle is driving on a road covered with snow or ice, the tire grip generally weakens, causing the vehicle to respond differently to handling inputs.

Riding in the Sand

Riding on the beach and sand dunes is a unique experience, but there are a few basic precautions to be aware of. Humidity, depth, or fine sand may cause loss of traction and cause the vehicle to slip, sink, or get stuck. If such a situation occurs, seek a solid foundation and remind you again that the best advice is to slow down and pay attention to the terrain.

When riding on sand dunes, it is recommended to equip the vehicle with an antenna type safety flagpole, which will help people on other sand dunes see your position more easily. If you see another safety flagpole ahead, please proceed with caution.

Riding on Gravel, Loose Stones, or Other Smooth Roads

Riding on gravel or loose stones is very similar to riding on ice, which can affect the vehicle's steering and easily cause slipping and overturning at high speeds. In addition, braking distance may also be affected, please remember that "spraying" the accelerator pedal or slipping tires may cause stones to bounce backwards and injure others.

Crossing Over Obstacles

Be particularly careful when crossing obstacles on the path, including rocks, fallen trees, and depressions, and try to avoid them as much as possible. Please remember that some obstacles that are too big or too dangerous to cross should be avoided. The general guideline is not to attempt to climb over obstacles higher than the ground clearance. Small rocks or fallen trees may be safe to climb over. When approaching obstacles, the speed should be reduced and the angle should be as large as possible. When adjusting the speed, the power should not be lost and sudden acceleration should not be made. Passengers must tightly hold the armrest and firmly place both feet on the bottom of the car.

Mountain Driving Conditions

When driving on hills or slopes, two things are particularly important: be prepared for smooth road surfaces or terrain changes, obstacles, and keep your body properly inside the vehicle. If the road surface is too smooth or the ground is loose when climbing or descending, the car may lose control. If you climb over the top of a mountain slope on the highway, you may not have time to prepare for the terrain on the other side of the mountain. Avoid parking on slopes. When parking, be sure to press the gear selector to the parking gear, especially on slopes, to avoid rolling over. If you must park on a steep slope, block the wheels on the downhill side with stones or other suitable objects.

OPERATING VEHICLE

Driving Uphill

Using low-speed uphill driving, due to the configuration of this vehicle, even when climbing hills, it has very good traction, so it is more likely to overturn before losing traction. For example, it is common to encounter a mountain peak that has been eroded and damaged, resulting in a sharp rise in slope. This vehicle has not been specifically designed to cross such terrain, so please choose another safer path.

When you feel that the slope is too steep to climb, please apply the brakes to secure the vehicle, shift the gear to reverse (R), and go straight downhill backwards. Gently release the brakes to maintain low speed, do not attempt to turn, do not slide downhill in neutral, and do not apply sharp brakes as it increases the risk of rollover

Driving Downhill

This car can climb steep slopes but cannot safely descend from the same steep slope. Therefore, it is very important to ensure a safe route with a downhill slope before going uphill. Reducing speed while climbing a smooth downhill slope can cause the vehicle to “sharply descend” and slip. Maintain a stable speed or accelerate slightly to regain control, and do not brake too hard or lock the wheels.

Pulling & Hauling Cargo

Your vehicle can assist you in performing various types of light tasks, including snow removal, pulling wood, or transporting goods. This may alter the handling of the vehicle. To prevent injury, please follow the instructions and warnings in this manual and on the vehicle body. Always comply with the cargo limit requirements of this vehicle. Overloading can cause excessive load-bearing on components and lead to malfunctions.

Carrying Goods

The limited load capacity of the vehicle, which is 1,322 lbs. (600 kg), includes the total weight of the driver, passengers, cargo, and accessories. The following is an example of a reasonable distribution of total vehicle load:

Example of Reasonable Total Vehicle Load Capacity				
DRIVERS & PASSENGERS	CONTAINER LOAD CAPACITY	ATTACHMENT STORAGE	TOWING WEIGHT	TOTAL VEHICLE LOAD CAPACITY
200	350	20	30	600

⚠ WARNING

When driving on a flat road, if the total load exceeds 540 lbs. (540 lb), the speed limit is 31 mph (31 mph). When driving on muddy or damaged roads, if the total load exceeds 386 lbs. (386 lb), the speed limit is 16 mph (16 mph).

OPERATING VEHICLE

Vehicle Settings for Transporting Goods

If the vehicle's load is close to 992 lb. (992 lbs.), including the driver, passengers, cargo, accessories, and trailer towing weight:

- Inflate the tire to maximum tire pressure: Front: 18 PSI (124kPa), Rear: 20 PSI (137 kPa)
- Adjust the preload of the shock absorber spring accordingly
- When the cargo box is carrying goods or towing a trailer, reduce the speed of the vehicle

Cargo Distribution

This vehicle is designed to carry or tow a certain weight of cargo. Please ensure that: Read and understand the cargo distribution warning information indicated on the warning label.

- Do not exceed the specified weight
- The cargo weight should be as low as possible
- When carrying or towing goods on rough or steep terrain, reduce vehicle speed and minimize cargo to maintain stable driving conditions

Pull or Trailer

This car is equipped with a towing interface and winch for easy towing or hauling.

⚠ WARNING
Prohibit the use of winches for towing, as prolonged towing can cause battery depletion.

⚠ WARNING
Do not drag while not in Ready state, as dragging can cause damage to the motor controller (MCU).

Transporting Cargo

- Do not attach the goods to the door frame, as this may cause the vehicle to overturn. Only use a trailer or winch (if installed) to transport the goods
- Use chains or ropes to tow cargo, make sure there is no slack before starting the vehicle, and maintain tension during towing

OPERATING VEHICLE

⚠ WARNING

Relaxation can cause chain or rope breakage and rebound, which may lead to injury accidents.

- When towing cargo, please follow the maximum traction force of the vehicle
- When towing cargo, please follow the maximum traction force of the vehicle. When transporting another vehicle, please ensure that someone is in control of the vehicle being towed so that it can brake or turn to prevent the vehicle from losing control
- When towing cargo, reduce the speed and turn slowly to avoid chains, ties, or ropes touching the rear wheels. Avoid slopes and rugged terrain, do not attempt to operate on steep slopes, reserve a greater braking distance, especially on sloping roads, be careful not to slide
- Before using a winch to transport cargo, please refer to the winch instruction manual

When using a trailer behind the vehicle, please ensure that the trailer is compatible with the vehicle body and that the trailer and the vehicle are level. When the trailer malfunctions, use safety chains or ropes to firmly secure the trailer to the vehicle.

Incorrect towing of a trailer may cause loss of control. Please follow the recommended maximum towing load and maximum towing load to ensure that there is at least some load-bearing capacity on the trailer. Follow the following guidelines for proper towing and towing of goods:

⚠ WARNING

Overloading of vehicles, improper transportation or towing of goods may alter vehicle handling and potentially cause loss of control or unstable braking.

When towing or towing cargo, the vehicle speed should be reduced. Do not exceed the load specified for this vehicle. Before operating the vehicle, all cargo must be firmly secured. Cargo that is not firmly secured may move and create unstable operating conditions, leading to vehicle loss of control.

- When operating on rough or steep terrain, reduce vehicle speed and cargo to maintain stable driving conditions
- When the vehicle is loaded, special caution should be taken when applying the brakes, avoiding terrain or situations that may require reversing downhill
- The load distribution should be as low as possible. High load will increase the center of gravity of the vehicle and create unstable operating conditions. When the center of gravity of the cargo is relatively high, the weight of the cargo should be reduced

OPERATING VEHICLE

- When the cargo that deviates from the center cannot be centered, please firmly fix the cargo and be cautious when operating
- When the load exceeds the cargo area, the stability and operability of the vehicle may be adversely affected, causing the machine to roll over
- Dragging goods while carrying them may cause imbalance and increase the likelihood of vehicle overturning. The proportion of balanced load should not exceed the specified limit load
- Use towing points and equipment specifically designed for trailers, and do not exceed the recommended towing capacity
- It is not recommended to use chains, zip ties, ropes, or other materials to drag objects, as these may entangle the rear wheels and cause vehicle malfunction or personal injury
- When towing goods on a horizontal plane, the vehicle must not exceed 10 mph (10 mph), and when towing goods on rough terrain, turning or going up and down hills, the vehicle speed must not exceed 5 mph (5 mph)
- When parking or parking, block the side where the wheels and trailer wheels may move
- Be extra careful when disconnecting a trailer with a load, as the trailer or its cargo may push you or others over

Maximum Traction			
ATTACHMENT TYPE	**TRAILER ALLOWABLE LOAD**	**TONGUE WEIGHT** ***(VERTICAL TRACTION FORCE)***	**ATTENTION**
51 mm × 51 mm Dragging Ball Head Bracket	300	30	Including trailer and trailer load

⚠ WARNING

When the trailer load approaches 661lb. (661 lbs.) and driving on a flat road surface, in order to ensure driving safety and reduce vehicle damage, the following measures must be taken:

- The vehicle is empty.
- Switch the vehicle to four-wheel drive mode.
- Reduce the vehicle speed to below 9 mph (9 mph).
- Use low speed to increase traction and stability.

OPERATING VEHICLE

Winch Operation

(Optional) Your vehicle may be equipped with a winch capable of pulling loads of a certain weight and type. The winch can be used for self-rescue when the vehicle is stuck or to assist in freeing other vehicles, When the vehicle is equipped with a winch or has optional winch accessories, please follow the safety warnings, operational precautions, and instructions in this chapter

Winch Safety Warning

When the vehicle is equipped with a winch or optional winch accessory, please follow the following safety warnings:

- Read all the contents of this manual.
- Incorrect use of the winch or failure to follow the correct winch guidance, instructions, and warnings in this manual may result in serious injury or death.
- Incorrect or lack of winch maintenance can lead to serious injuries and fatal accidents.
- Always keep your body, hair, clothing, jewelry, etc. away from the winch ropes, guides, and hooks when operating the winch.
- Always keep the area around the vehicle, winch, winch rope, and load free from personnel, pets, and interferences.
- Always wear goggles and thick gloves when operating the winch.
- Do not drink alcohol or take medication before or during the operation of the winch.
- Children under the age of 16 are not allowed to operate the winch.
- Do not attempt to forcefully pull the load by moving the vehicle.
- Do not use the winch to move upwards or downwards, or to form sharp angles on both sides, as this may shake the winch vehicle and cause it to move without warning.
- Do not attempt to load the winch beyond its rated power.
- Do not touch, push, pull or cross the rope when the winch is loaded.
- Do not allow the winch rope to pass through your hands, even if wearing thick gloves.
- Do not release the winch hub when the winch rope is loaded.
- Do not use winches to lift or transport personnel.
- Do not use winches to lift or suspend vertical loads.
- Do not fully retract the hook into the winch. This will cause damage to system components.
- Do not operate winches or vehicles that require repair or maintenance.
- When not using the vehicle or winch, be sure to turn off the ignition switch and retract the remote control (if equipped) to prevent negligence or unauthorized use

OPERATING VEHICLE

Safety Precautions for Winch Operation

When the vehicle is equipped with a winch or optional winch accessories, please follow these safety precautions:

- Be sure to check the winch and winch rope before each use
- Always align the load in front of the vehicle with the winch as much as possible, and avoid the winch rope forming an angle with the vehicle centerline as much as possible. If angle formation cannot be avoided when using a winch, please follow the following precautions:
    - Regularly check the winch drum and do not stack or concentrate the winch ropes on one end of the winch hub. Concentrating too many winch ropes in a section of the winch hub can lead to winch and winch rope failures
    - If stacking occurs, the winch should be stopped immediately. According to the “Guidelines for Winch Rope Winding” section of this manual, before continuing to operate the winch, re wrap the winch rope evenly
- When using a winch, always use the vehicle’s parking brake or parking mechanism to stabilize the vehicle and keep it in place. If necessary, use wheel chocks
- Ensure that the winch rope on the winch hub is kept for at least five turns at all times. The wrapped rope provides friction, allowing the hub to pull the winch rope and move the load
- Do not apply butter or engine oil on the winch rope. This will cause debris to stick to the winch rope, shortening the service life of the winch rope
- During the use of the winch, the winch motor and relay may generate heat. When the winch is used for more than 45 seconds or breaks down during operation, the winch should be stopped and allowed to cool for at least 10 minutes before being used again
- Do not operate the winch when the engine is not started and running. The engine charging system will help maintain battery power. The stored electricity in the battery will be rapidly depleted due to the extensive use of winches, resulting in the inability of the starting system to function
- When operating the winch, always pay attention to the surrounding situation and do not intentionally damage trees, etc

Basic Operation of Winch

- When the vehicle is equipped with a winch or optional winch accessories, please follow the following operating instructions that must be followed. Before using the winch, read the winch safety warning and winch operation safety precautions on the previous page
- Before starting - please be aware that each winch usage scenario is unique
- Take time to consider what purpose to use a winch for
- Operate slowly and cautiously
- Do not rush when using the winch
- Always pay attention to the surrounding situation
- If the effect cannot be achieved, you may need to change the winch strategy
- Always remember that the winch has a strong force. There are some simple situations that you and your winch may not be able to handle. When such situations occur, do not be afraid to seek help from others

OPERATING VEHICLE

1. Before each use of the winch, always check the vehicle, winch, winch rope, and winch controller for any signs of damage or for any parts that need to be repaired or replaced before use. When the winch is being used (or previously used) to lift an accessory plow component, special attention should be paid to the first 3-foot (1-meter) length of winch rope. If there is any wear or damage, the winch rope should be replaced immediately.
2. When using a winch, the vehicle parking brake or parking mechanism should be continuously applied to secure the vehicle in the appropriate position. Use wheel chocks if necessary.
3. Release the winch hub and pull out the necessary length of winch rope. Be sure to use hook straps when handling hooks. Do not remove the hook strap from the hook.

Attention: Always ensure that at least five turns of winch rope are retained on the winch hub. The friction provided by the winding winch rope allows the hub to pull the winch rope and move the load.

4. Attach the hook to the load, or use trailer straps or chains to tie the load to the winch hook. Do not hang the winch rope back onto yourself, as this can damage the winch rope and cause rope failure.

⚠ WARNING

Do not use the 'first aid belt' for winch operation. The first aid belt is designed to be extendable, and when the drawstring or winch rope breaks, it can release excessive force and cause serious injury or death accidents. Only use undamaged non extendable ties or chains.

5. Restart the winch hub
6. Slowly tighten the slack winch rope until it is tightened, then stop and follow the following "winch damping" instructions to ensure safe operation
    - To absorb the force released due to winch rope failure, place a damper at the center point of the winch rope length. Damping can be a thick jacket, waterproof cloth, or other soft, thick object. When using a winch, if the winch rope breaks, damping can absorb more of the force it releases. If there is no available object, tree branches can also be used as damping.
    - Place the damping at the center of the winch rope.
    - When the distance is long, it may be necessary to stop the winch operation in order to reposition the damping in the middle position of the winch rope. Be sure to relax the tension of the winch rope when repositioning the damping position.
    - When operating the winch, try to avoid being in a straight line with the winch rope as much as possible, and do not allow anyone else to stand next to the winch rope or in a straight line
7. Stop using the winch immediately when the work is completed or the load can be moved away without the help of the winch
8. Loosen the winch hook and then follow the instructions in this manual to re wrap the winch rope back onto the winch hub

OPERATING VEHICLE

VEHICLE TROUBLESHOOTING METHODS

Vehicle self rescue:

- Release the winch hub and pull out the necessary length of winch rope
- Whenever possible, choose an anchor point as close as possible to align the winch rope with the vehicle centerline. This will help the winch rope automatically retract and reduce the load on the cable guide.
- Attach the winch hook to the anchor point
- ***Attention: When using trees to rescue vehicles, use a tree tie when operating the winch to avoid damaging the trees. Sharp ropes and chains can damage or even destroy trees.***
- Restart the winch hub
- Slowly tighten the slack winch rope with a winch, and then use damping
- Shift to the lowest gear to advance the vehicle towards the winch direction
- Be careful to use both winch power and accelerator pedal simultaneously to rescue the vehicle
- ***Attention: Simultaneously using the vehicle accelerator pedal and winch may pose risks, which is optional. If you are unsure of your operational ability, please shift the vehicle to neutral and only use the winch.***
- When a trapped vehicle is able to propel itself without the need for winch assistance, the winch should be immediately stopped. Loosen the winch hook and then follow the instructions in this manual to evenly wrap the rope onto the wheel hub again
- ***Attention: Vehicles equipped with winches can only move and use them when rescuing themselves. Vehicles equipped with winches must not attempt to recover another stranded vehicle by moving the "impact load" winch rope. For more information, refer to the "Winch Impact Load" section.***

Relieve Other Vehicles

- Place the winch hub and pull out the necessary length of rope
- The winch hook is attached to the vehicle. Whenever possible, choose a closest anchor point on the stranded vehicle to align the winch rope with the centerline of the winch vehicle. This will help the winch rope automatically retract and reduce the load on the cable guide
- ***Attention: Do not attach the winch hook to suspension components, protective covers, bumpers, or shelves as it may cause damage to the vehicle. Always attach the hook to the strongest part of the frame or trailer.***
- Restart the winch hub
- Slowly tighten the slack winch rope with a winch, and then use damping
- The trapped vehicle shifts to the lowest gear in order to advance towards the winch direction
- Be careful when using winch power and accelerator pedals to rescue trapped vehicles
- When the trapped vehicle is able to propel itself without the need for winch assistance, immediately stop using the winch
- Unfasten the winch hook and follow the instructions in this manual to evenly wrap the rope back onto the winch hub

OPERATING VEHICLE

Maintenance of Winch Rope

Before each use, it is necessary to check whether the winch rope is worn or twisted, and damaged winch ropes must not be used. Follow the following inspection and usage guidelines:

The twisting, deformation or bending of the winch rope made of steel wire rope material is permanent and very serious damage. If this situation occurs, the use of the winch rope should be immediately stopped.

After the twisted steel wire winch rope is “straightened”, even if it looks usable, the rope has been permanently and severely damaged, and cannot continue to reach its rated load. In this case, the winch rope should be immediately stopped from use.

The synthetic fiber winch rope should be checked for signs of wear. If wear is found, the rope should be replaced immediately. In this case, the use of the winch rope should be immediately stopped.

When the fibers of the winch rope melt, the synthetic fiber winch rope should be replaced. The damaged area of synthetic fiber rope will become harder and appear relatively smooth. In this situation, the use of winch ropes should be immediately stopped.

Ordinary polymer ropes shall not be used as a substitute for synthetic fiber winch ropes. Only use winch specific ropes specifically designed for winch use.

Do not apply butter or engine oil on the wire winch rope, as this can cause the rope to absorb debris and shorten its service life.

Do not operate winches with faulty hooks or bolts, and be sure to replace damaged components before using the winch.

Warning: When signs of damage appear, the winch rope and components should be replaced as soon as possible to prevent serious injury or death accidents caused by malfunction.

Automatic Winding Guidance for Winch Rope

After using the winch, especially when the winch is angled, it may be necessary to evenly wrap the winch rope around the winch hub. This can reduce the probability of the winch rope “squeezing” between the lower ropes. You also need an assistant to complete this task:

- Release the winch hub.
- Pull out the winch rope that is unevenly wrapped around the winch hub.
- Restart the winch hub.
- Ask the assistant to tightly grip the winch rope hook strap, reaching a tension of nearly 100lbs. (99 lbs.). Slowly tighten the rope with the winch, while the assistant moves the end of the winch rope and evenly distributes it to the winch hub in a forward horizontal direction

OPERATING VEHICLE

Winch 'Impact Load'

The winch (if equipped) is designed and tested to withstand the load generated when operating a stationary vehicle. Be sure to remember that winches, winch ropes, and components are not designed for impact loads. Please follow the following guidance:

Do not attempt to "pull" the load with a winch. For example, it is not allowed to attempt to move objects by loosening the winch rope by moving the winch vehicle. This is a dangerous behavior that can generate high loads beyond the load-bearing capacity of the components. Even slow-moving vehicles can generate large impact loads, which can cause malfunctions and accidents.

Do not quickly and repeatedly open and close the winch. This is a way of impacting the load, which can increase excessive load on the winch components, winch ropes, and cause overheating of the motor and relay components.

Do not use winches to tow vehicles or other objects. Using a winch for traction will generate impact loads, even at low speeds. Using a winch for traction, the traction force will be located at a high point on the vehicle, which can cause instability and potentially lead to accidents.

Do not use first aid belts when operating winches, as this is a way to impact loads. The first aid belt is designed to be extendable and capable of storing energy. When a malfunction occurs, the energy stored in the first aid belt will be released, making the accident more dangerous. Similarly, elastic bands such as rubber ropes should not be used for winch operations.

Do not use a winch to tie the vehicle under a trailer or other transportation device. This is a type of impact load driving that can damage winch components, winch ropes, or other transportation devices.

MAINTENANCE

Careful regular maintenance will help the vehicle maintain the safest and most reliable condition. The maintenance schedule provides detailed instructions for inspecting, adjusting, and lubricating important components.

Check, clean, lubricate, adjust, and replace necessary components. When the inspection indicates the need to replace components, please ensure to use genuine original parts from the dealer

Be Careful

Regular maintenance and adjustment are crucial. If you are not familiar with the procedures for maintenance and adjustment, please contact a qualified dealer for professional repair and maintenance.

Definition of Adverse Use

Sabre defines vehicles as being used under harsh conditions as follows:

- Often immersed in mud, water, or sand.
- Competitions or similar competitions use high RPM.
- Frequent short distance operations in cold weather.
- Vehicles are used for commercial operations.
- If your vehicle uses any of the definitions above, the maintenance interval will be shortened by 50%.

Incorrectly performing maintenance procedures marked with " ■ " may lead to component failure and result in serious injury or fatal accidents. Please have an authorized dealer perform the maintenance.

Recommended Lubrication

Check all components according to the maintenance intervals listed in the maintenance schedule. Items not listed in the schedule should be lubricated at regular intervals.

Key Issues of Lubrication Table

- After use under harsh conditions, such as humid or dusty conditions, lubricating oil should be replaced more frequently.
- Use seasonal grease on the pivot point.
- Lubrication should be performed every 500 miles (900KM) before long-term storage, after high-pressure water washing, or after submerging the transmission system.

PROJECT	LUBRICATING OIL SPECIFICATIONS	FILLING CAPACITY
Brake Fluid	DOT4	30
Front Axle Oil	SAE 80W-90 GL-5	700ml
Rear Axle Oil	SAE 80W-90 GL-5	700ml
Drive Shaft		

MAINTENANCE

Pre-Cycling Maintenance Checklist — Perform the Following Checks Before Operating the Vehicle

PROJECT		Pre-Cycling Maintenance Items			
		HOUR	SCHEDULE (MONTH)	MILES (KILOMETERS)	REMARKS
■	Steering System	—	Before cycling	—	Visually inspect, test, or examine components. Adjust or arrange maintenance plans when requested
■	Return of Accelerator Pedal	—	Before cycling	—	
	Front Suspension & Axle	—	Before cycling	—	
	Rear Suspension & Axle	—	Before cycling	—	
	Tire	—	Before cycling	—	
	Brake Fluid Level	—	Before cycling	—	
	Electronic Parking Brake	—	Before cycling	—	
	Braking System Function	—	Before cycling	—	
	Wheels/Fasteners	—		—	
▸	Headlight alignment / normal Lighting and turn signals	—	Before cycling	—	Check. Adjust or replace the lighting fixtures when necessary.
▸	Radiator	—	Before cycling	—	Check if there is any soil or debris blocking the air intake on the surface, and clean the surface if necessary.

- ▸ Adverse use items reduce the maintenance interval of vehicles by 50% when subjected to adverse use.
- ■ Parts or systems that require authorized dealers to perform repairs.
- ● Components related to emissions must be repaired by authorized dealers for that component or system

MAINTENANCE

Maintenance Checklist for Break in Period — Perform the following maintenance items at the expiration of 20 hours or the specified mileage interval, whichever comes first

PROJECT		Run in Period Maintenance (Based on the Latest Expiration Date)			
		HOUR	SCHEDULE (MONTH)	MILES (KILOMETERS)	REMARKS
	Conventional Lubrication	20h	—	200 (320)	Lubricate all grease points, fuel injectors, cables, etc
	Front & Rear Axle Oil	20h	—	200 (320)	Check the oil level and check for oil leakage
▸	Brake Pads	20h	—	200 (320)	Check the thickness of the brake pads
	Storage Battery	20h	—	200 (320)	Check the terminals, clean them, and test the battery condition if necessary
■	Steering / Wheel Calibration	20h	—	200 (320)	Check the steering system and contact the dealer for wheel calibration if necessary
▸	Foot Brake / Electronic Parking	20h	—	200 (320)	Check the function and adjust it if necessary
■	Bridge Body, Drive Shaft	20h	—	200 (320)	Check for oil leakage

- ▸ Adverse use items reduce the maintenance interval of vehicles by 50% when subjected to adverse use.
- ■ Parts or systems that require authorized dealers to perform repairs.
- ● Components related to emissions must be repaired by authorized dealers for that component or system

MAINTENANCE

Regular Maintenance Plan — After the 20 hour break in period, perform maintenance at intervals according to the maintenance plan, taking the earliest due item

PROJECT		Run in Period Maintenance (Based on the Latest Expiration Date)			
		HOUR	SCHEDULE (MONTH)	MILES (KILOMETERS)	REMARKS
▶	Brake Pads	10h	Monthly	100 (160)	Check the thickness of the brake pads.
	Storage Battery	20h	12M	1000 (1600)	Check the terminal. Clean and test the battery condition if necessary.
▶	Conventional Lubrication	50h	3M	500 (800)	Lubricate all refueling points, cables, etc
▶	Front Axle Oil	50h	12M	500 (800)	Check the oil level, and if the hour or distance reading is not reached, replace it annually.
▶	Rear Axle Oil	50h	12M	500 (800)	
▶	Steering System	50h	6M	500 (800)	Inspect and clean the external surface. If subjected to harsh use, cleaning must be done more frequently.
■	Front Suspension	50h	6M	500 (800)	Check and lubricate
▶	Rear Suspension	50h	6M	500 (800)	Lubrication, check fasteners
▶	Circuit, Fuse	50h	6M	500 (800)	
▶	Connectors, Relays, Cables	100h	6M	1000 (1600)	Check the wear and tear of the circuit, ensure safety, and use necessary non-conductive grease for joints that come into contact with water, mud, etc
▶ ■	Vehicle Bearings	100h	12M	1500 (2400)	Check for noise and looseness, replace if necessary
▶	Seat Belt	100h	12M	2000 (3200)	Visually inspect the seat belt and test the latch. If subjected to harsh use, the locking mechanism needs to be cleaned more frequently and replaced if necessary.

MAINTENANCE

▸	Brake	200h	24M	1000 (1600)	Check the color change of the brake fluid and replace it every two years.
■	Steering/Wheel Calibration	—	12M		Check the steering system. If steering accessories or wheel calibration are required, please contact the dealer for maintenance and repair
▸	Foot Brake Height	—	12M		Check and replace brake pads or adjust height if necessary

- ▸ Adverse use items reduce the maintenance interval of vehicles by 50% when subjected to adverse use.
- ■ Parts or systems that require authorized dealers to perform repairs.
- ● Components related to emissions must be repaired by authorized dealers for that component or system

MAINTENANCE

Front & Rear Axles

Before operating the vehicle, it is necessary to check whether there is any oil leakage in the front and rear axles. If oil leakage is found, do not continue driving the vehicle and contact your dealer for inspection and repair

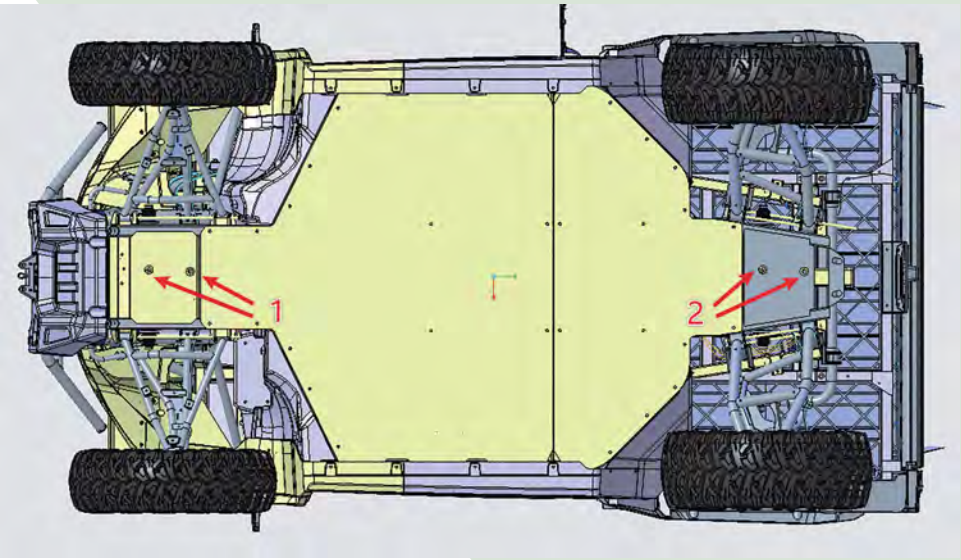

1 Front Axle Oil Drain Port 2 Rear Axle Oil Drain Port

Replace the Lubricating Oil of the Front & Rear Axles

Sabre defines vehicles as being used under harsh conditions as follows:

1. Place the vehicle on a flat surface and keep it parked
2. Place oil basins under the front and rear axles to collect used axle oil
3. Remove the magnetic oil drain bolt and washer at the bottom
4. Clean the debris and dirt adsorbed by the magnetic oil drain bolt. If the gasket is damaged, please replace it with a new one
5. Wait for a few minutes until the bridge oil is completely drained
6. Install the magnetic oil drain bolt and washer at the bottom
7. Remove the refueling bolt and washer 3
8. Add recommended bridge oil of specified capacity using appropriate tools
9. When adding bridge oil, wait until the bridge oil reaches the oil level observation window 4 position

Attention: Tightening torque for oil drain bolt and oil fill bolt: 14.8 ft lb. (15-20 N • m)

- Front axle oil capacity: 0.845qt. (800 mL)
- Rear axle oil capacity: 0.845qt. (800 mL)
- Waste engine oil should not be disposed of at will and should be handed over to a specialized organization for disposal ***Front & Rear Axles***

MAINTENANCE





1 Fuel Filler 2 Oil Level Observation Window

Front & Rear Drive Shaft Sealing Covers

Before riding, the front and rear sealing covers must be checked for any holes or wear. If any damage is found, please contact your dealer for repair

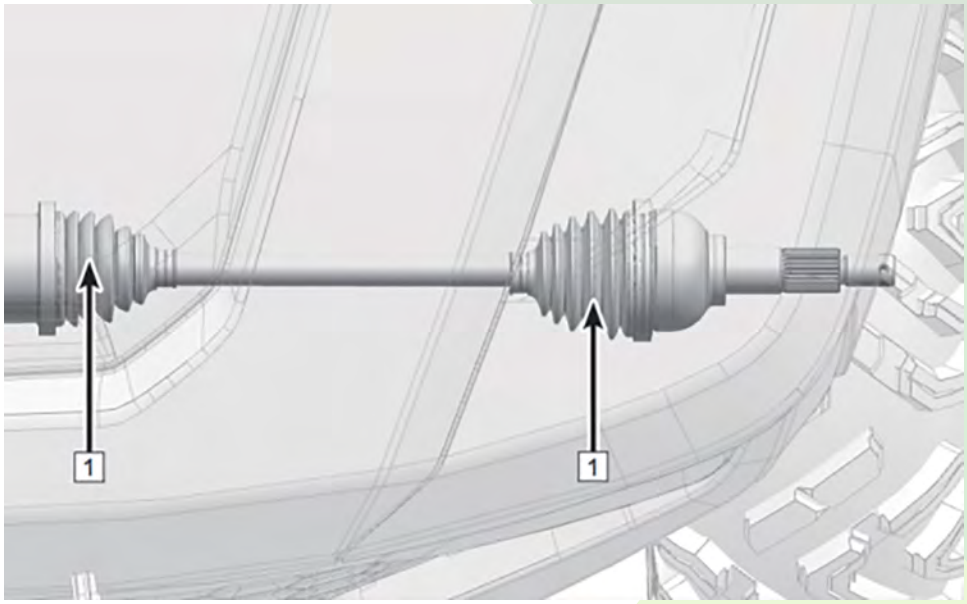

MAINTENANCE

Clean the Radiator

Check if the surface of the heat sink of the front and rear controllers is covered with soil or debris, and if there is continuous air output. This is a sign that the heat dissipation of the controller can pass through.

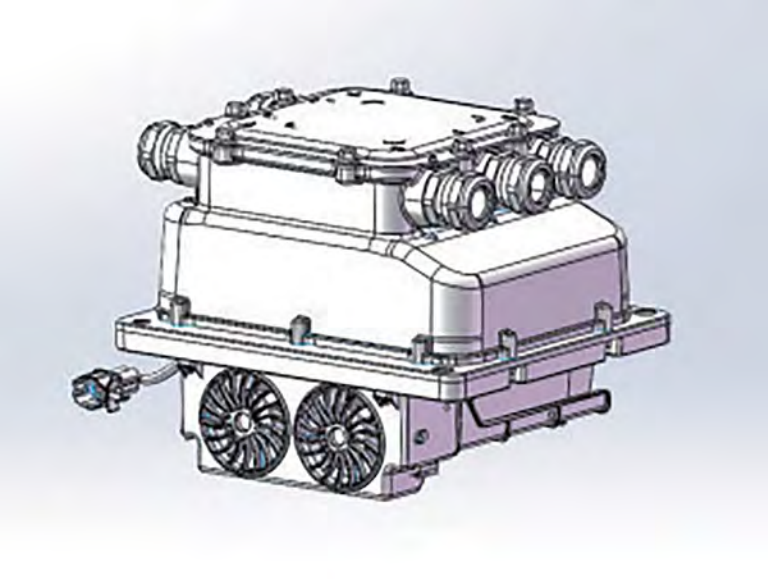

Storage Battery

The battery is located under the rear cargo box of the vehicle, and can be seen when the cargo box is lifted. The battery is equipped with a 12V/12AH, sealed low maintenance battery (1), so there is no need to check the electrolyte or add distilled water to the battery. If the battery leaks electricity, the shell is damaged or other abnormalities occur, please contact the dealer for repair and replacement in a timely manner.

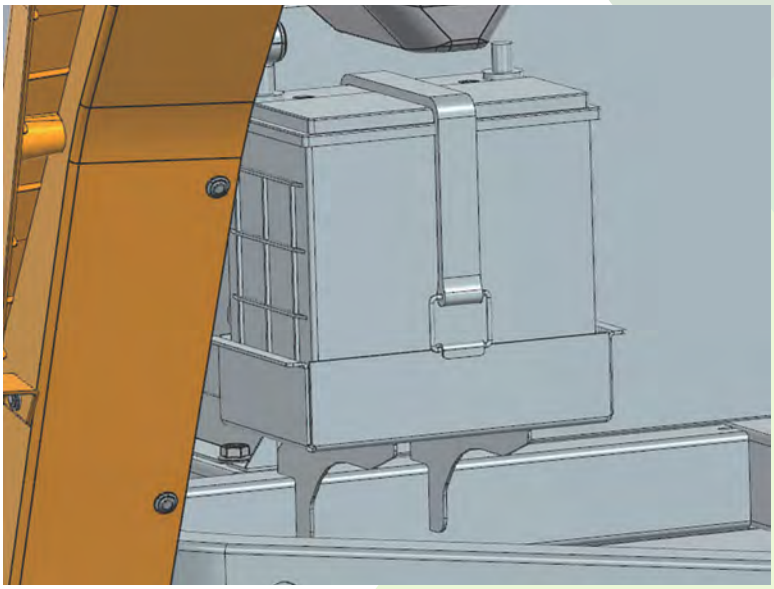

MAINTENANCE

Battery Disassembly

1. Place the vehicle on a flat surface and park it
2. Turn off the electric lock, press the power switch to completely power off the vehicle ignition system
3. Open the front panel
4. Remove the black negative wire (-)
5. Remove the red positive wire (+)
6. Remove the battery fixing strap
7. Remove the battery

Battery Maintenance

1. Clean the battery casing with a soft brush dipped in a mixed solvent of baking soda and water
2. Use a wire brush to remove rust from the positive and negative wire terminals and the positive and negative poles
3. Low maintenance batteries require special battery chargers for charging (constant low voltage/ampere). Using traditional battery chargers will reduce the lifespan of the battery
4. Vehicles that have not been used within 30 days (in car batteries) should be charged monthly or connected to a trickle charger (battery maintainer)
5. When charging the battery, it must be removed from the vehicle

Battery Installation

1. Place the vehicle on a flat surface and park it;
2. Turn off the electric lock, press the power switch to completely power off the vehicle ignition system;
3. Put in the battery;
4. Install the battery fixing strap;
5. Install the red positive wire (+);
6. Install the black negative wire (-).
7. Cover the front panel

⚠ WARNING

Avoid direct contact with skin, eyes, and clothing, and always take eye protection measures when working near batteries. Keep the battery out of reach of children. Keep the battery away from sparks, open flames, cigarettes, or ignition points. When using batteries or charging in a confined space, the area should be ventilated. Acid detoxification treatment for batteries:

External: Rinse with clean water, Internal: Seek medical attention immediately, Eyes: Rinse with clean water for 15 minutes and seek medical attention immediately

Attention: Incorrect disassembly and assembly sequence of positive and negative pole wires may cause a short circuit between the battery and the vehicle body. Please remember the color and disassembly sequence of the positive and negative poles

MAINTENANCE

Battery Charging

1. Remove the battery
2. Connect the dedicated charger to the positive terminal of the battery
3. Connect the dedicated charger
4. Disconnect the charger after charging is complete
5. Separate the charger from the battery

Notes

- The maximum charging current of the charger is 10% of the battery capacity
- If the vehicle is not used for a long time, the battery should be recharged every three months

Power Battery

COMPOSITION OF POWER BATTERY		
1. Travel Motor 2interface	2. Traction Motor 1interface	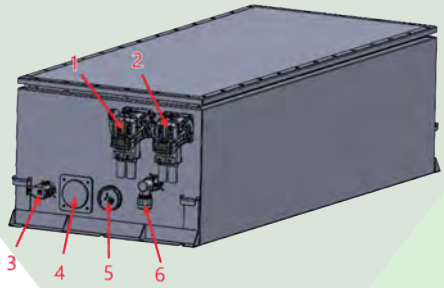
3. Communication Interface	4. Antenna	
5. Explosion-Proof Valve	6. Charging Port	

ATTENTION

- The power battery cannot be cleaned or repaired;
- If there is a malfunction, please contact the dealer in a timely manner for handling;
- The removed power battery, even if stored temporarily, should comply with the storage environment requirements of the battery / power battery;
- Read and follow all instructions given on the labels affixed to the vehicle, which are intended to protect your safety.
- High voltage system components are not for users to repair on their own. Do not disassemble, remove, or replace high-voltage components, cables, or connectors without authorization

⚠ WARNING

1. It is strictly prohibited to use or leave batteries near hot and high-temperature sources (such as fire, heaters, etc.);
2. Do not use in areas with strong static electricity and strong magnetic fields, otherwise it may damage the power battery system and pose a safety hazard.
3. It is strictly prohibited to use batteries by reversing the positive and negative poles;

MAINTENANCE

Power Battery Storage

1. Storage temperature: 77 ± 9°F, with relative humidity ≤ 65% RH (no condensation).
2. The storage environment must be dry, clean, and well ventilated. Protect the battery from severe vibration, impact, compression, direct sunlight, and rain. Equip the area with carbon dioxide fire extinguishers and other firefighting equipment suitable for electrical fires.
3. Avoid contact with corrosive materials or gases.
4. Clearly label the battery, keep it away from fire and heat sources, and ensure proper insulation.
5. Ensure the battery box protective cover is securely installed and free from damage or other defects.
6. Insulate the positive and negative terminals with protective components or other insulating materials. No metal should be exposed.
7. If the battery will be stored for more than 30 days, maintain the state of charge (SOC) at approximately 50%. Regularly check and adjust the charge level, preferably every 3 months.

Handling & Transportation

1. Before handling, check the insulation of the battery pack to ensure that the total positive and negative insulation resistance of the battery casing is ≥ 200 MΩ.
2. Handle with care and keep the battery upright. Do not place it upside down or at an angle. Use specialized transportation equipment. Do not manually move or drag the battery, and avoid damaging its exterior.
3. Transport the battery pack in a partially discharged state, with a remaining charge of at least 30%. Determine the appropriate charge level based on transportation time and the battery's self-discharge rate.
4. Protect electrical interfaces during transportation to prevent impacts and drops.
5. During transportation, protect the battery from severe vibration, impact, compression, direct sunlight, and rain. Equip the transport area with carbon dioxide fire extinguishers and other firefighting equipment suitable for electrical fires.
6. Transport and handle power battery system enclosures in accordance with applicable regulations. Dragging, prying, or other forceful handling methods are strictly prohibited.
7. Use a forklift or specialized equipment to load and unload products. Handle with care. Do not throw, drop, or squeeze the battery, as this may damage the battery system or cause personal injury.

Other Precautions During Battery Use

1. Under no circumstances should the power battery system be put into fire or immersed in liquids (such as fresh water, seawater, etc.).
2. It is strictly prohibited to plug or unplug any connectors on the power battery when the vehicle is in the "ON" state.
3. Before driving, check the remaining battery level. It is recommended to charge to 50% to 100% before driving. Confirm that there is no battery system alarm message on the dashboard. If there is an alarm message, stop all operations and immediately contact the vehicle's after-sales service personnel for guidance and assistance.

MAINTENANCE

4. When the vehicle is no longer running due to low battery, it is prohibited to use high energy consumption functions and should be recharged in a timely manner.
5. When the instrument panel displays SOC below 20% while driving, it is recommended to charge it in a timely manner.
6. When driving on rainy days, attention should be paid to water accumulation. When the vehicle needs to wade through water, it should be confirmed that the depth of water accumulation will not submerge the battery pack's socket to prevent possible short circuits from damaging the battery system.
7. If you have any concerns about the safety of the product, please stop using it first, disconnect it from the power supply, and then immediately contact the vehicle after-sales service personnel for further guidance

BRAKING SYSTEM

Brake Fluid Level Inspection

The oil pot is located below the front panel. Before riding, check if the brake fluid level is above the minimum mark. If necessary, please add brake fluid. The brake fluid cup is located under the front panel. Insufficient brake fluid will cause air to enter the brake system, which may lead to brake failure.

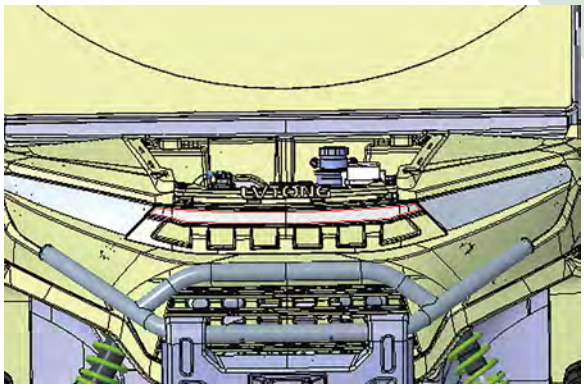



Preventive Measures

- Only use brake fluid of the specified quality, otherwise the rubber seals may deteriorate, leading to brake fluid leakage and poor braking
- Recommended brake fluid: DOT 4
- Please use the same model when replenishing brake fluid. Mixed brake fluid may produce harmful chemical reactions and cause poor braking
- Be careful not to let water enter the main pump oil cup. Water can lower the boiling point of brake fluid, leading to poor braking
- Brake fluid may damage painted surfaces or plastic parts. If there is any overflow, please clean it up immediately

MAINTENANCE

- It is normal for the brake fluid level to decrease when the brake pads wear out. A low brake fluid level may indicate brake pad wear or brake system oil leakage. Therefore, make sure to check for brake pad wear before checking for oil leakage in the brake system.
- If the brake fluid level suddenly drops without reason, please contact your dealer to investigate the cause

Brake Pad Inspection

Check the front and rear brake pads and brake discs for damage and wear. If the brake pad thickness (2) is less than 0.08 in. (0.079") or the brake disc thickness (1) is less than 0.16 in. (0.157"), please have the dealer replace it. Replacing brake components requires professional knowledge, please have your dealer perform these operations.

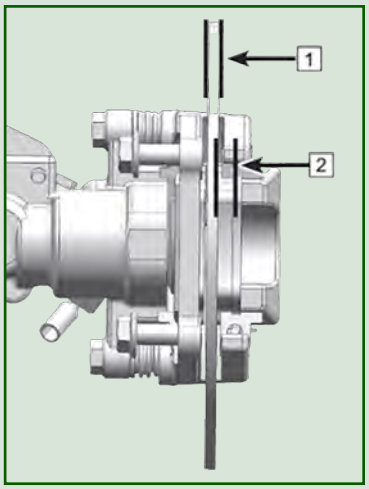

Attention: When checking the brake pads, the wheels must be removed first.

⚠ WARNING

After Repair:
- Ensure smooth braking operation and correct free clearance of the brake lever.
- Ensure that there is no resistance during braking and that the braking operation is not loose.
- Drain the air from the braking system

Exhaust Method of Brake Pipeline

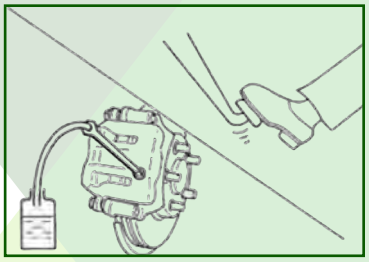

1. Manual brake bleeding requires two people. Bleed the brakes in order from the farthest wheel to the nearest wheel, generally in this sequence: right rear wheel → left rear wheel → right front wheel → left front wheel.
2. Remove the dust cap from the brake cylinder bleeder valve. Attach a suitably sized transparent hose to the valve and place the other end in a container. Ensure the end of the hose remains submerged in the collected brake fluid.
3. One person presses the brake pedal several times and then holds it down firmly. The other person loosens the brake cylinder bleeder screw by half a turn. Air and brake fluid will escape together. When the brake pedal reaches the end of its travel, immediately tighten the bleeder screw. Both people must coordinate their actions carefully.
4. Repeat the procedure until no air bubbles appear in the escaping brake fluid. Then tighten the bleeder screw and reinstall the dust cap.
5. Throughout the bleeding process, regularly check the brake fluid level in the reservoir and replenish it promptly if it becomes low.

MAINTENANCE

⚠ WARNING

Overloaded brake master cylinder may cause braking resistance or brake lock, which may lead to accidents causing serious injury or death. Please keep the brake fluid within the recommended range and avoid excessive use.

⚠ WARNING

Do not store or use half a bottle of brake fluid. Brake fluid is hygroscopic, which means it can quickly absorb moisture from the air. Moisture can cause a decrease in the boiling point temperature of brake fluid, leading to premature braking failure and potentially causing accidents or serious injuries. Therefore, after opening a bottle of brake fluid, any remaining unused parts should be discarded.

SUSPEND

Lubrication of Front Rocker Arm Shaft Sleeve & Rear Torsion Bar

Lubricate the rocker arm bushing of the front suspension and the torsion bar of the rear suspension. Use an oil gun to inject lubricating grease into grease fitting (1) until it slowly flows out of the sleeve.

ATTENTION

There are a total of 4 grease fittings on the front suspension rocker arm shaft sleeve and 12 grease fittings on the rear suspension torsion bar, symmetrical on both sides.

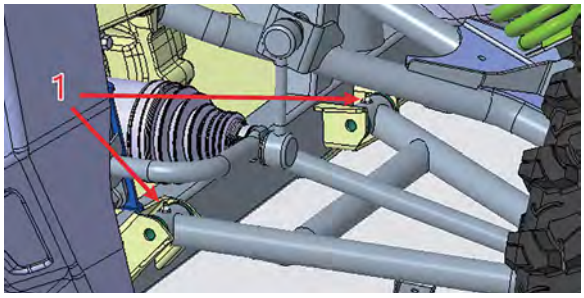

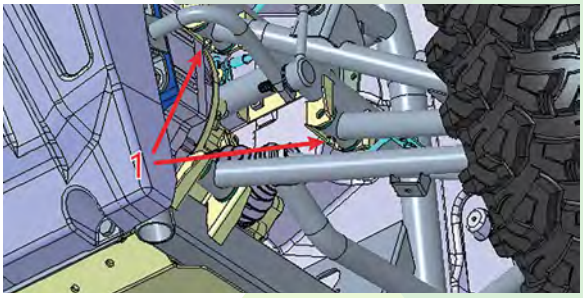

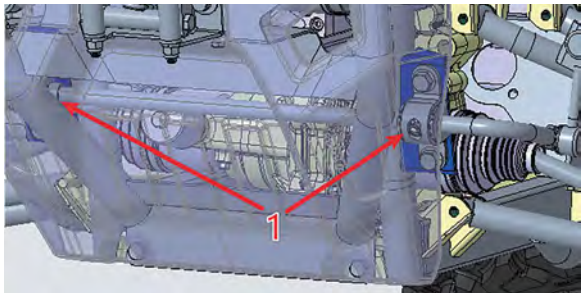

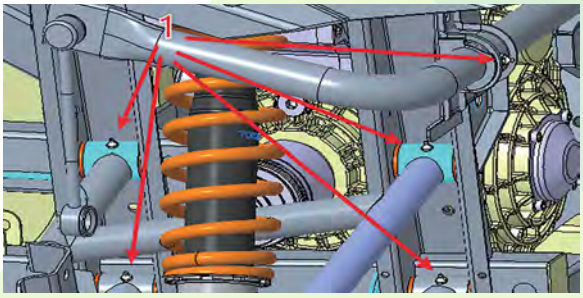

MAINTENANCE

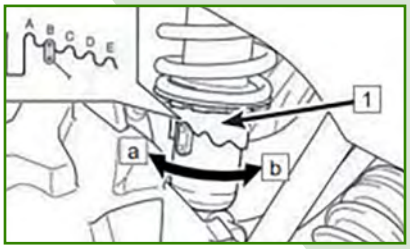

ADJUSTMENT OF FRONT & REAR SHOCK ABSORBERS

Standard Shock Absorber

The spring preload can be adjusted to fit the rider's weight and riding conditions

Attention

When adjusting the rear shock absorber, it is necessary to remove the rear wheels



Adjust the Spring Preload According to the Following Steps

Use special tool (2) to rotate gear towards direction b (1) to increase the spring preload.

- B - Standard preload position
- A - Minimum (soft)
- E - Maximum (hard)



WHEEL

Tire Pressure & Tread

Before operating the vehicle, check the tire pressure with a tire pressure pen and inspect the tread:

- Front Wheel = 29×9.00R14 8PR (78J) : 16psi(110kPa)
- Rear Wheel = 29×11.00R14 8PR (83J) : 18 psi(124 kPa)
- Tire tread thickness = Regularly check the thickness of the tread pattern. If the thickness is less than the minimum value (A), please replace the tire
- Minimum pattern thickness : 1/8 in. (3.0mm)

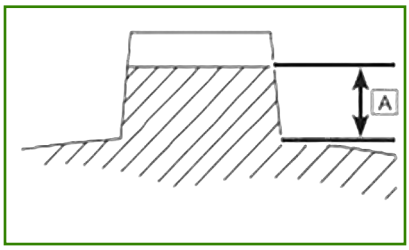

Wheel Bearings

- Lift the vehicle and safely support it under the frame so that the tires are off the ground.
- Push and pull the outer side of the tire to feel the side clearance or looseness. If there is any side clearance or looseness, please contact the dealer

MAINTENANCE

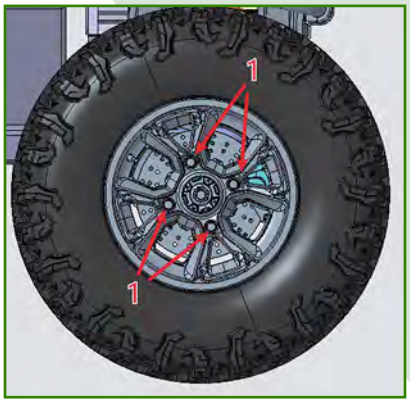

REPLACE THE WHEEL

Disassemble

- Place the vehicle on a flat surface
- Lift the vehicle and suspend it with a suitable support bracket
- Remove the wheel nut (1)
- Remove the wheels

Install

- Place the wheels in the correct direction onto the wheel mounting bracket and preliminarily secure them with wheel nuts
- Tighten the wheel nut (1) (tightening torque 51 ft lb~59 ft lb. (100 N • m~110 N • m))
- Remove the vehicle support bracket and place the vehicle steadily on the ground

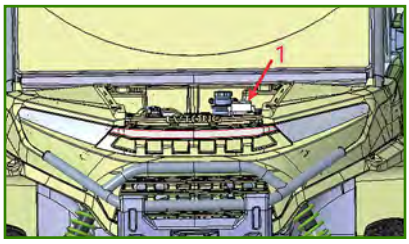

ELECTRICAL APPLIANCE

Fuse Box

The fuse box (1) is located below the front panel. If the fuse is blown, please turn off the main switch and install a new fuse with the specified ampere value. Turn on the main switch. If the fuse blows immediately, please contact your dealer.

Electronic relays are beneficial for operating various vehicle system functions. The relays are integrated into the fuse box. If you need to replace the relays or perform diagnostics, please contact your dealer

⚠ WARNING

To prevent accidental short circuits, please turn off the main switch before checking or replacing the fuse. Always use fuses with the correct specified rating. Do not use conductive materials as a substitute for the correct fuse. Incorrect fuses may cause damage to electrical systems and may lead to fires.

MAINTENANCE

INSURANCE DISTRIBUTION DIAGRAM

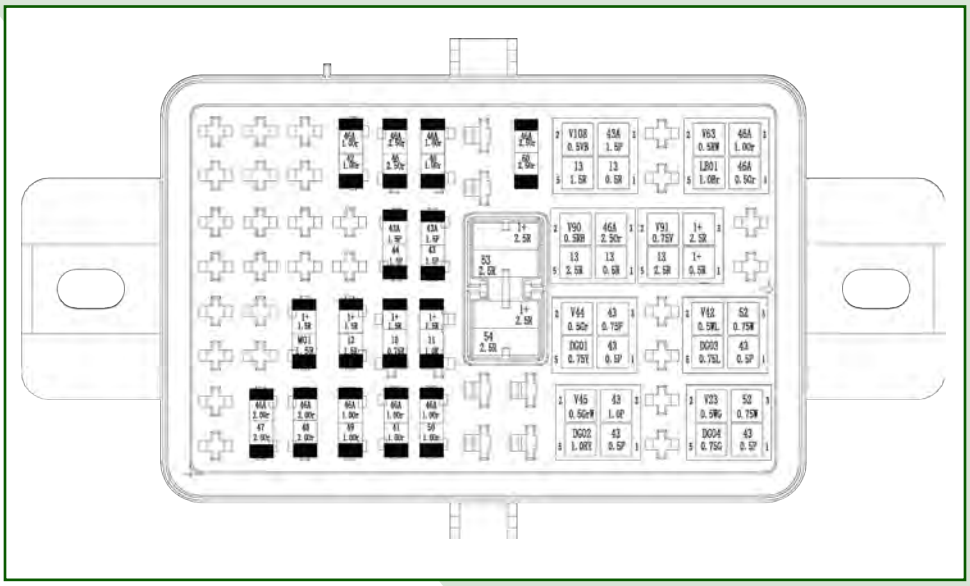

Explanation of Insurance Function (Explanation of Insurance Cover Adhesive Function)

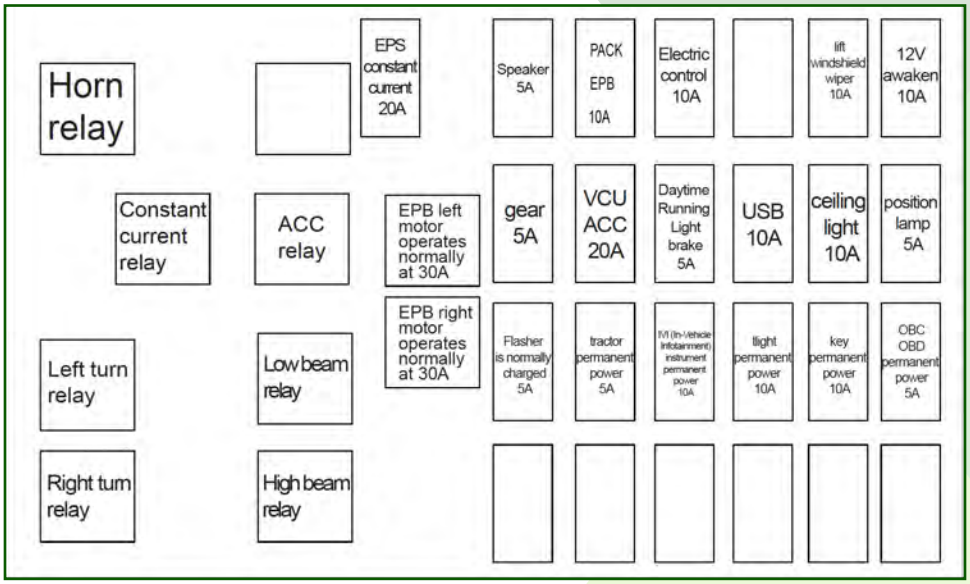

PS: Reserve one 5A, 5A, 10A, 15A, and 20A fuse for the fuse box cover

MAINTENANCE

Headlight Adjustment

- Rotate the high beam adjustment knob (1) by hand to adjust the vertical light of the high beam
- Rotate the low beam adjustment knob (2) by hand to adjust the vertical light of the low beam

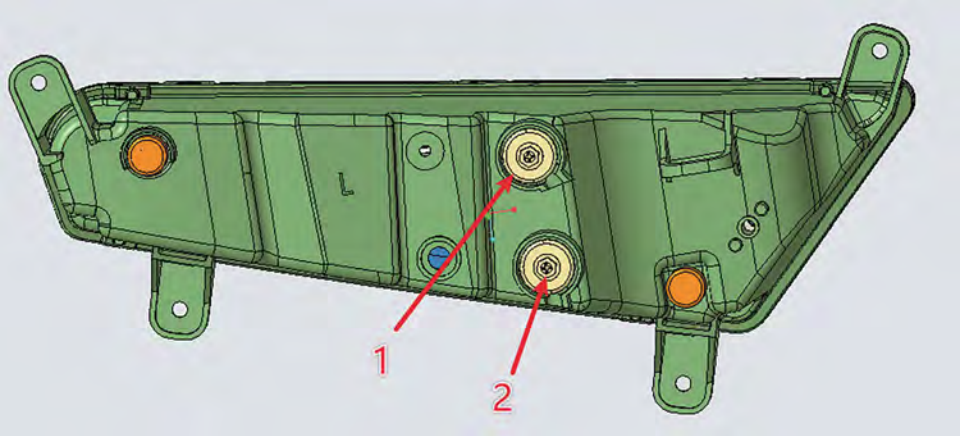

⚠ WARNING

Suggest having your dealer adjust the headlights. Incorrect adjustments may lead to serious accidents, resulting in injuries or fatalities

MAINTENANCE

Seat Belt

This car is equipped with three-point seat belts for both the driver and passengers. Before operating the vehicle, ensure that all passenger seat belts are fastened.

⚠ WARNING
Falling off a moving vehicle can result in serious injury or fatal accidents. Be sure to fasten your seat belt before operating or riding the vehicle

Please Fasten Your Seat Belt Correctly & Follow the Following Steps

- For three-point seat belts, pull down the seat belt tongue (1) and thread the buckle towards the edge of the seat cushion through the chest. The seat belt should comfortably pass diagonally through the buttocks and chest. Ensure that the seat belt is not twisted.
- Insert the seat belt latch (1) into the buckle (2) until you hear a clicking sound.
- Release some webbing, it will automatically lock.
- To unfasten the seat belt, press the square red button at the center of the buckle.

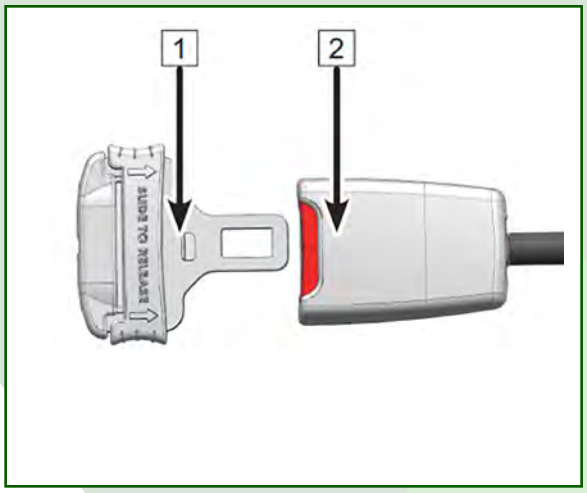

Before Each Use of the Vehicle, Check that All Seat Belts are Functioning Properly

1. Insert the seatbelt lock tongue into the buckle until you hear a click. The lock tongue must smoothly slide into the lock buckle. The clicking sound indicates that it has been securely locked.
2. Press the red unlock button in the middle of the lock to ensure smooth unlocking.
3. Pull out each seat belt completely to check for any damage along its entire length, including cuts, wear, or stiffness. If any damage is found or the seat belt cannot operate normally, the entire seat belt system should be inspected or replaced by a dealer or qualified personnel.
4. Clean the dirt or debris on the seat belt, and scrub the seat belt with mild soap and water. Do not use bleach, dyes, or household detergents. Rinse the entire length of the strap. Regularly flush the lock buckle (1) and the outer shell of the coiler (2) using the garden hose

CLEANING & STORAGE

Cleaning Vehicles

Keeping the vehicle clean not only improves its appearance, but also extends the service life of most of its components. Take some preventive measures to keep your vehicle clean like a car:

- The best and safest way to clean a vehicle is to use a garden hose, a bucket of mild soap, and water. Stimulating cleaning agents may cause degradation of rubber components.
- Use professional cleaning gloves to first clean the upper part of the vehicle, and finally clean the lower part of the vehicle.
- Pay special attention to the radiator part of the cooling system and the corrugated sleeve of the bridge, ensuring that they have been thoroughly cleaned and free of dirt and debris.
- Regularly clean with water and dry the vehicle with suede to prevent water stains.
- Immediately lubricate all pivot points after cleaning

Sabre does not recommend using high-pressure car cleaning systems to clean vehicles. Because high-pressure water may compress the seal and damage the sticker. If using a high-pressure cleaning system, extra attention should be paid to prevent damage to stickers, wheel bearings, transmission seals, body panels, brakes, warning labels, and the three electric system. If the warning and safety labels are damaged, please contact your dealer for replacement.

Vehicle Waxing

You can use non abrasive car wax for waxing your vehicle. Avoid using harsh cleaning agents as they may scratch the surface of the vehicle.

⚠ WARNING

Some products, including insect repellents and other chemicals, can damage the surface of plastic parts, so please be extra careful when using these products around the surface of plastic parts.

Repair

Before storing the vehicle, perform necessary maintenance to prevent malfunctions during the next operation.

Check the Tires

Check the tire tread and overall condition, and set the tire to the specified tire pressure

CLEANING & STORAGE

Check the Oil Level & Liquid Level

Check the following oil level and replace if necessary

- Maebashi
- Rear Axle
- Brake fluid (to be replaced every two years or as required when the brake fluid appears dull or contaminated)

Battery Storage

- Remove the battery from the car and fully charge it before storage. Protect the battery from freezing in low temperature environments, as low temperature environments can damage the battery

Lubrication

Check all cables and lubricate them with cable lubricant according to the product label instructions. Use seasonal lubricating grease to lubricate all lubrication points of the vehicle.

Storage Area & Covering

Use a support frame to support the vehicle under the frame, keeping the tires 30mm~40mm (1.2in~1.6in) off the ground. Ensure good ventilation in the storage area and cover the machine with approved coverings.

Attention

Plastic or coated covers are not allowed, as they do not provide effective ventilation to prevent condensation and may promote corrosion and oxidation.

Transport Vehicle

Please follow the following procedure when transporting vehicles:

- Turn off the vehicle and remove the key to prevent key loss during transportation.
- Ensure that the power battery is installed correctly and safely.
- Ensure that the seat cushion is installed correctly and safely.
- Set the electronic shifter to neutral, activate electronic parking, and block the front and rear wheels to prevent the vehicle from moving.
- Protect the front and rear frames during transportation to prevent the vehicle from sliding or moving

⚠ WARNING
During transportation, the electronic shifter should not be set in the parking position as it may cause damage to the electric drive system.

AFTER-SALES SERVICE

In order to protect the interests of customers and ensure that they can receive good sales service from our company when using our products, please carefully read the following content

WARRANTY CONTENT, OBJECT AND PERIOD

Warranty Coverage

After purchasing products from our company's distributors, please read the instructions carefully and operate them correctly according to the instructions. During the warranty period, if there are any quality problems caused by materials, manufacturing, or design, our company promises to repair or replace defective parts

Warranty object and content

From the date of manufacture:

1. Provide free maintenance services in accordance with the "Regulations on Quality Warranty of Aries EV"
2. Tires, seat cushions, backrests and other vulnerable parts are not covered by the warranty. If they are damaged during use, please contact the manufacturer
3. If there are batch quality issues, our company will send technical personnel to repair or recall defective products (including domestic and foreign)
4. Provide long-term paid services after one year

The following situations do not cause quality issues:

1. Not operating and using according to the instructions;
2. Not repairing at the designated repair shop of our company;
3. Exceeding the warranty period;
4. Not using our company's original spare parts;
5. Unauthorized modification without the permission of our company;
6. Used beyond the maximum carrying capacity;
7. Due to force majeure factors such as typhoons, floods, earthquakes, and wars;

Warranty Effective

The purchaser must truthfully fill out the warranty card at the place of purchase, stamp and sign it, and the domestic user shall return it to the company, and the foreign user shall return it to the distributor. The distributor shall input the information into the computer according to the company's prescribed form, send it to the company via email, and confirm receipt by the company before it can take effect.

Special Statement

Any damage to our products caused by failure to follow the instructions during use is not covered by the warranty or replacement.

RECORDS

	Perform maintenance according to this maintenance schedule					
INSPECTION SEQUENCE	**1**	**2**	**3**	**4**	**5**	**6**
Date						
Mile / Kilometer						
Dealer's Signature And Seal						
INSPECTION SEQUENCE	**7**	**8**	**9**	**10**	**11**	**12**
Date						
Mile / Kilometer						
Dealer's Signature And Seal						

APPENDIX

Content & Methods of Self-Inspection & Comprehensive Inspection

NO.	DETECTION CONTENT		DETECTION METHOD	SELF-CHECK	COMPREHENSIVE INSPECTION
1	TEST ITEM	Complete Vehicle Appearance	At present, whether the appearance of the vehicle is intact, whether there are sharp edges and corners, whether the windshield has cracks or fissures, whether the vehicle seats are damaged, and whether the seat fastening is good;	✓	✓
2		Main Load-Bearing Structural Components	Visually inspect whether the main load-bearing structural components such as the vehicle frame and roof pillars have bent or deformed. Fracture and open welding. Phenomena such as rust and loose bolts;	–	✓
3		Main Components	Check if the lights, speakers, wipers, instruments, etc. are intact, verify if their functions are normal, and inspect the wear and pressure of the tires;	✓	✓
4		Nameplates & Markings	Visually inspect whether the vehicle nameplate, license plate, and safety warning signs are intact;	–	✓
5		Power System	Check whether the motor runs smoothly and without abnormal noise; Check whether the battery box is intact, whether it is firmly fixed, whether there is electrolyte leakage, whether the battery terminals are corroded, and whether the connections are loose;	✓	✓
6		Driving System	Check whether the vehicle runs smoothly and without abnormal noise, and whether the connections of each component are tight;	✓	✓
7		Steering & Operating System	Check whether the connections of various components in the steering system are tight, whether the steering is flexible, whether the steering idle stroke is normal, and inspect whether the shifting mechanism and operating system function properly;	✓	✓
8		Braking System	Check and verify whether the service brake and parking brake are effective, and whether the hydraulic brake system is leaking;	✓	✓
9		Electrical & Control Systems	Check if the electrical connectors and plugs are secure and if the circuit is damaged;	✓	✓

APPENDIX

Contents & Methods of Self-Inspection & Comprehensive Inspection

10	TEST ITEM	Safety Protection & Protective Devices	Check whether the seat belt, safety guardrail, and handrail are intact, and verify whether the seat belt connection device and buckle connection are firm;	✓	✓
11		Steering Performance	The all terrain vehicle is in an unloaded state, with the steering wheel turned to the maximum angle and kept constant. It runs at the minimum stable speed, draws the trajectory of the outermost side of the vehicle, and measures the minimum outer turning radius. It is measured twice for the front left, front right, rear left, and rear right, and the average value is taken for each side; Verify whether the turning radius of the vehicle meets the performance parameter requirements;	–	✓
12		Braking Performance	The all terrain vehicle is in an unloaded state and applies emergency braking at the maximum speed. Use a tape measure to measure the braking distance of the vehicle and verify if there are any abnormalities in the braking distance. On the road with the maximum slope of the route, apply full load parking brake in both uphill and downhill directions, and visually inspect whether the vehicle has slid down within 5 minutes;	–	✓
13		Electrical Safety	Use an insulation resistance tester (500V) to measure the insulation resistance of the battery pole to the frame. The insulation resistance should not be less than 50 kΩ. Operate the emergency power-off device to verify whether the device can cut off the main power and reset normally	–	✓

Note: "√" indicates "required", and "–" indicates "not required".



SABRE

[P] (866) 274-3738
[E] info@ariesev.com
[W] ariesev.com

ADDRESS
1540 N Frontage RD, STE 108
Plant City, FL 33563 USA